INDEX OF DRAWINGS

E1.0	COVER SHEET, DRAWING INDEX AND LEGEND
E1.1	GENERAL CONSTRUCTION NOTES
E1.2	GUM HOLLOW PROPOSED ELECTRIC PLAN (SHEET 1 OF 8)
E1.3	GUM HOLLOW PROPOSED ELECTRIC PLAN (SHEET 2 OF 8)
E1.4	GUM HOLLOW PROPOSED ELECTRIC PLAN (SHEET 3 OF 8)
E1.5	GUM HOLLOW PROPOSED ELECTRIC PLAN (SHEET 4 OF 8)
E1.6	GUM HOLLOW PROPOSED ELECTRIC PLAN (SHEET 5 OF 8)
E1.7	GUM HOLLOW PROPOSED ELECTRIC PLAN (SHEET 6 OF 8)
E1.8	GUM HOLLOW PROPOSED ELECTRIC PLAN (SHEET 7 OF 8)
E1.9	GUM HOLLOW PROPOSED ELECTRIC PLAN (SHEET 8 OF 8)
E1.10	NORTH ILLINOIS PROPOSED ELECTRIC PLAN
E1.11	CONSTRUCTION DETAILS (SHEET 1 OF 4)
E1.12	CONSTRUCTION DETAILS (SHEET 2 OF 4)
E1.13	CONSTRUCTION DETAILS (SHEET 3 OF 4)
E1.14	CONSTRUCTION DETAILS (SHEET 4 OF 4)

LEGEND

—+P—	EXISTING 1–PHASE POWER
—++P—	EXISTING 3–PHASE POWER
—---P—	PROPOSED 3–PHASE POWER
—I—I—I—I—	OVERHEAD DUPLEX / LIGHTING
—III—III—	OVERHEAD TRIPLEX
⊗	EXISTING POWER POLE
●	PROPOSED POWER POLE
◉	REPLACE POWER POLE
▲	TRANSFORMER
—+—	EXISTING ANCHOR
—+—	PROPOSED ANCHOR
—⊗	STREET LIGHT

GUM HOLLOW ROAD

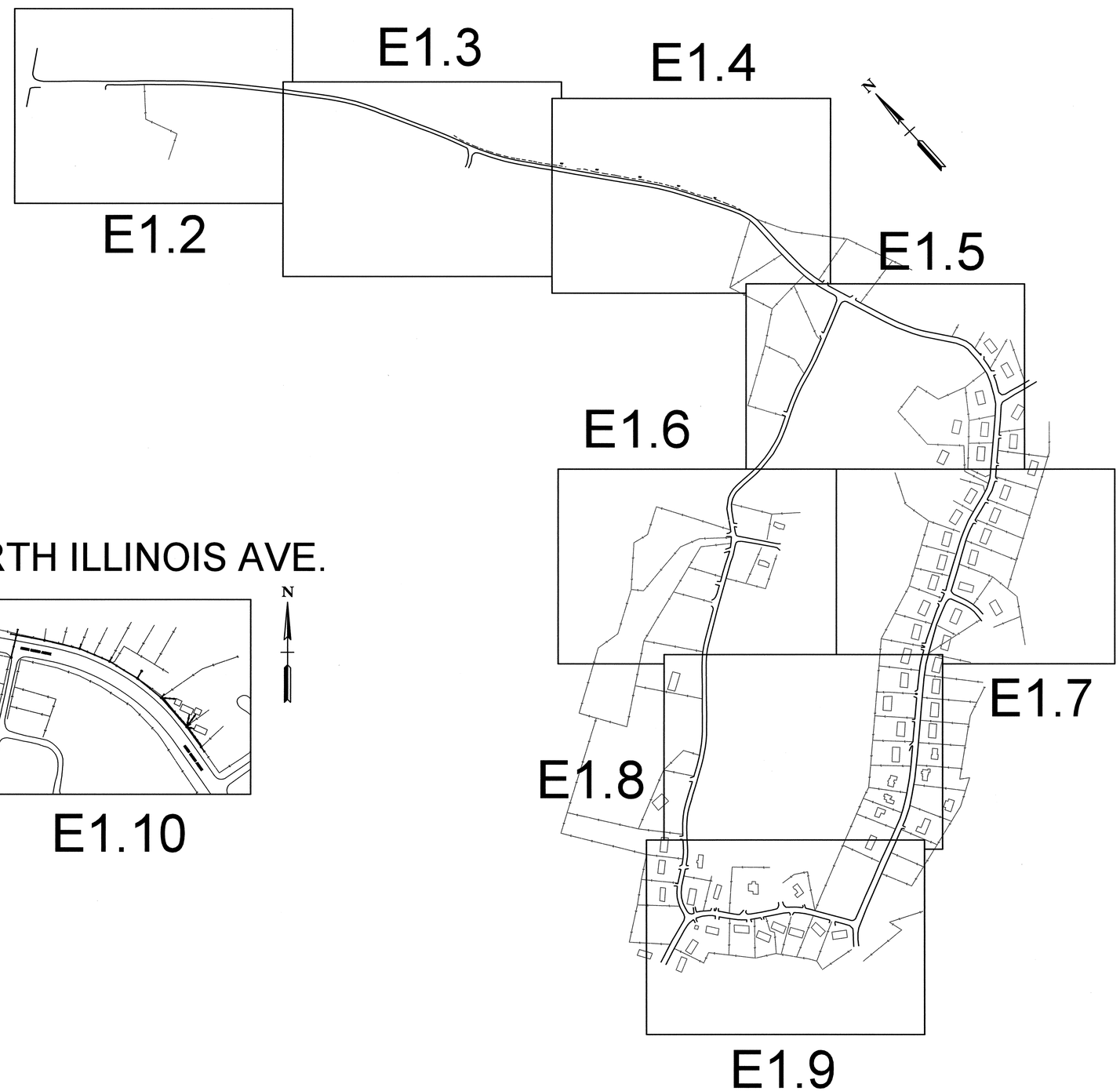

NORTH ILLINOIS AVE.

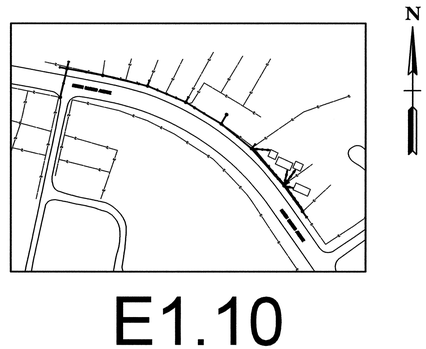

UTILITY INFORMATION
CITY OF OAK RIDGE ELECTRIC DEPARTMENT
100 WOODBURY LANE
OAK RIDGE, TENNESSEE 37830
CONTACT: MISSY SHEHAN
PHONE: (865) 425–1830

G S & P

Design Services For The Built Environment

Atlanta
Birmingham
Chipley
Cincinnati
Columbus
Dallas
Fort Lauderdale
Jackson
Jacksonville
Knoxville
Louisville
Memphis
Nashville
Richmond
Tampa

GRESHAM SMITH AND PARTNERS
2095 Lakeside Centre Way, Suite 120
Knoxville, Tennessee 37922
865.521.6777
WWW.GSPNET.COM

OVERHEAD 13kV HENDRIX INSTALLATION
GUM HOLLOW ROAD AND
NORTH ILLINOIS AVENUE
OAK RIDGE, TENNESSEE

REVISION		
No.	Date	Revision

JOHN B. WHARTON
REGISTERED PROFESSIONAL ENGINEER
NO. 108111
STATE OF TENNESSEE
2/17/16

COVER SHEET, DRAWING INDEX AND LEGEND

E1.0

SCALE: NONE
PROJECT: 41089.01
DATE: 2015

GENERAL CONSTRUCTION NOTES

1. THE FOLLOWING INFORMATION APPLIES TO THE UTILITY CONTRACTOR RESPONSIBLE FOR THE INSTALLATION OF THE ELECTRICAL FACILITIES ALONG THIS PROJECT, AS WELL AS THE CONTRACTOR RESPONSIBLE FOR THE CLEARING/CUTTING OF REQUIRED AREAS OUTSIDE OF RIGHT–OF–WAY WHEN REQUIRED FOR THE INSTALLATION OF THE ELECTRICAL FACILITIES ALONG THIS PROJECT.

2. ANY DEVIATION OF THE CONDITIONS LISTED MUST BE APPROVED BY THE UTILITY OWNER PRIOR TO THE DEVIATION TAKING PLACE ON THE PROJECT. FAILURE BY THE UTILITY CONTRACTOR OR SUBCONTRACTORS TO FOLLOW THESE CONDITIONS AS LISTED WILL RESULT IN REFUSAL OF ACCEPTANCE BY THE UTILITY OWNER TO ACCEPT THE PROJECT AT IT'S COMPLETION UNTIL SUCH TIME AS ANY DEFICIENCIES ARE CORRECTED TO THE SATISFACTION OF THE UTILITY.

3. ALL WORK SHALL BE DONE IN A SAFE, THOROUGH AND WORKMAN–LIKE MANNER IN ACCORDANCE WITH THE PLAN SHEETS, CONSTRUCTION DETAILS AND TECHNICAL SPECIFICATIONS AS WELL AS ANYAND ALL APPLICABLE SAFETY CODES, INCLUDING, BUT NOT LIMITED TO, THE NATIONAL ELECTRICAL SAFETY CODE (NESC), AND ANY OTHER STATE AND LOCAL CODES THAT ARE REQUIRED FOR THE TYPE OF UTILITY WORK THAT IS BEING PERFORMED AS PART OF THIS CONTRACT.

4. THE UTILITY CONTRACTOR SHALL EXERCISE ALL STANDARD SAFETY PRACTICES WHEN WORKING ON ENERGIZED ELECTRICAL LINES (e.g. RUBBER GOODS INSPECTIONS, GROUNDING OF LINES AND VEHICLES / EQUIPMENT, TOOL INSPECTIONS, ADEQUATE SUPERVISION, ETC.).

5. THE UTILITY CONTRACTOR SHALL BEAR THE RESPONSIBILITY FOR THE SAFETY OF ITS EMPLOYEES AND SHALL ENSURE THAT THEY ABIDE BY ALL STATE, FEDERAL AND LOCAL REGULATIONS REGARDING SAFE WORK PRACTICES. IF SUCH REGULATIONS ARE VIOLATED, THE UTILITY OWNER SHALL MAINTAIN THE RIGHT TO STOP WORK ON THEIR FACILITIES UNTIL SUCH CONDITIONS ARE CORRECTED.

6. IN GENERAL, THE UTILITY CONTRACTOR SHALL BE RESPONSIBLE FOR ALL MATERIALS, METHODS, AND/OR INTEGRAL MATERIALS OUTLINED IN THE UTILITY CONSTRUCTION DRAWINGS AND THE TECHNICAL SPECIFICATIONS THAT ARE NECESSARY TO PROVIDE A COMPLETE AND FUNCTIONAL INSTALLATION OF THE UTILITY FACILITIES BEING INSTALLED. MATERIAL THAT IS TO BE SUPPLIED BY THE UTILITY OWNER IS LISTED IN THE TECHNICAL SPECIFICATIONS FOR THIS PROJECT.

7. ALL WORK DONE BY THE UTILITY CONTRACTOR IS TO BE PERFORMED WHILE THE EXISTING FACILITIES ARE ENERGIZED, REQUIRING THE UTILITY CONTRACTOR TO USE PROPER HOT LINE WORKING TECHNIQUES.

8. UTILITY CONSTRUCTION DRAWINGS ARE INCLUDED AS PART OF THE DRAWING PACKET AND MUST BE ADHERED TO DURING ALL PHASES OF CONSTRUCTION.

9. ALL MATERIALS TO BE USED BY THE UTILITY CONTRACTOR ON THE PROJECT MUST BE NEW MATERIALS AND MUST BE APPROVED BY THE UTILITY OWNER PRIOR TO PURCHASE OR USE. A PROPOSED LIST OF MATERIALS SHALL BE SUBMITTED TO THE UTILITY OWNER AS NOTED IN THE TECHNICAL SPECIFICATIONS FOR THE PROJECT. NO MATERIAL SUBSTITUTIONS ARE ALLOWED WITHOUT THE PRIOR CONSENT OF THE UTILITY OWNER. STORAGE LOCATION OF MATERIALS ON THE PROJECT SITE MUST BE A SECURE ENVIRONMENT. THE UTILITY CONTRACTOR IS RESPONSIBLE FOR ANY LOST, STOLEN OR DAMAGED MATERIALS ON THE PROJECT.

10. THE UTILITY CONTRACTOR IS TO PERFORM ALL REQUIRED WORK IN SUCH A MANNER AS TO NOT CAUSE UNINTENTIONAL OUTAGES TO THE CUSTOMERS ALONG THE PROJECT. ALL PLANNED OUTAGES MUST BE COORDINATED WITH THE UTILITY OWNER A MINIMUM OF 48 HOURS PRIOR TO THE PLANNED OUTAGE TO ALLOW TIME FOR THE CUSTOMER TO BE NOTIFIED BY THE UTILITY CONTRACTOR. LARGE SCALE OUTAGES ARE NOT ALLOWED.

11. IF FIELD CONDITIONS ARISE WHICH PREVENT THE CONSTRUCTION ON THE PROJECT FROM PROCEEDING AS DESIGNED, THE UTILITY CONTRACTOR WILL COORDINATE WITH THE UTILITY OWNER/ENGINEER TO RESOLVE THE ISSUES SO THAT CONSTRUCTION CAN CONTINUE.

12. TO DECREASE THE POTENTIAL FOR OUTAGES, THE UTILITY CONTRACTOR SHALL NOT HAVE MORE THAN ONE (1) MILE OF ELECTRICAL LINE LAID OUT UNDER CONSTRUCTION WITH TEMPORARY LAYOUT ARMS AT ANY ONE TIME.

13. THE UTILITY CONTRACTOR SHALL COMPLY WITH ALL CITY REGULATIONS, PERMITS AND TRAFFIC CONTROL GUIDELINES AS REQUIRED.

14. THE UTILITY CONTRACTOR SHALL NOTIFY EACH UTILITY OWNER OF HIS PLAN OF OPERATION IN THE AREA OF THE UTILITIES AND REQUEST THAT THE UTILITY OWNERS PROPERLY LOCATE AND MARK THEIR PERSPECTIVE UTILITY ON THE GROUND.

15. THE UTILITY CONTRACTOR SHALL REQUEST UTILITY LOCATIONS A MINIMUM OF THREE (3) BUSINESS DAYS PRIOR TO BEGINNING ANY CONSTRUCTION IN THE AREA OF THE UTILITIES IN QUESTION.

16. THE UTILITY CONTRACTOR WILL BE RESPONSIBLE FOR ANY EXCAVATION WORK REQUIRED TO LOCATE EXISTING UNDERGROUND UTILITIES. THE UTILITY CONTRACTOR IS ALSO REQUIRED TO NOTIFY ANY EXISTING UTILITY OWNER PRIOR TO DIGGING. IN THE EVENT THAT THERE IS ANY DAMAGE TO OR INTERRUPTION OF EXISTING FACILITIES, THE UTILITY CONTRACTOR WILL BE RESPONSIBLE FOR ANY COST INCURRED FROM THE EVENT.

17. SOME EXISTING UTILITIES CAN BE LOCATED BY CALLING TENNESSEE ONE–CALL SYSTEMS, INC. AT "811".

18 THE UTILITY CONTRACTOR SHALL PROVIDE ALL NECESSARY PROTECTIVE MEASURES TO SAFEGUARD EXISTING UTILITIES FROM DAMAGE DURING THE CONSTRUCTION OF THE PROJECT. IN THE EVENT THAT SPECIAL EQUIPMENT IS REQUIRED TO WORK OVER AND AROUND EXISTING UTILITIES, THE UTILITY CONTRACTOR SHALL BE REQUIRED TO FURNISH THE EQUIPMENT NECESSARY TO COMPLETE THE WORK.

19. THE UTILITY CONTRACTOR SHALL BE RESPONSIBLE FOR REPAIRING ANY DAMAGE CAUSED BY ITS EMPLOYEES IN AREAS OUTSIDE OF TDOT ROW ALONG THE LENGTH OF THE PROJECT. THE UTILITY CONTRACTOR SHALL ALSO BE RESPONSIBLE FOR RESOLVING ALL COMPLAINTS THAT MAY ARISE FROM ITS ACTIVITIES, AND SHALL PROMPTLY REPORT SUCH COMPLAINTS TO THE UTILITY OWNER AS TO WHETHER OR NOT IT HAS BEEN RESOLVED.

20. GROUND AND AERIAL INSPECTION OF INSTALLED FACILITIES ONCE COMPLETED SHALL BE THE RESPONSIBILITY OF THE UTILITY CONTRACTOR. ANY CORRECTIONS THAT ARE REQUIRED SHALL BE DONE DURING THE CONSTRUCTION OF THE PROJECT AND VERIFIED BY THE UTILITY OWNER/ENGINEER.

21. WHILE SOME WORK MAY ONLY BE REQUIRED "AROUND" OTHER UTILITY FACILITIES, SOME WORK MAY NEED TO BE DONE CONCURRENTLY WITH THE OPERATIONS OF OTHER UTILITY CONTRACTORS. IT IS THE RESPONSIBILITY OF THE CONTRACTOR TO ENSURE THAT ALL UTILITY COORDINATION BE ADDRESSED DURING THE CONSTRUCTION OF THE PROJECT.

22. PERSONNEL CHANGES ARE TO BE KEPT TO A MINIMUM DURING THE CONSTRUCTION OF THE PROJECT AS TO REDUCE UNFAMILIAR PERSONNEL TO BE WORKING ON THE FACILITIES OF THE UTILITY OWNER.

23. THE DISTANCES THAT ARE SHOWN ON THE DRAWINGS ARE HORIZONTAL DISTANCES ONLY, AND DO NOT ALLOW FOR ANY CHANGES IN ELEVATION THAT EXIST ALONG THE PROJECT.

24. ALL OIL–FILLED EQUIPMENT, INCLUDING RECLOSERS AND TRANSFORMERS, SHALL BE PROVIDED BY THE UTILITY OWNER. THE LABOR COST, AND MINOR MATERIALS REQUIRED TO INSTALL THESE UNITS SHALL BE INCLUDED IN THE BID FROM THE UTILITY CONTRACTOR.

25. THE UTILITY CONTRACTOR IS RESPONSIBLE FOR ENSURING THAT ALL TANGENT STRUCTURES ARE PROPERLY ALIGNED AFTER SETTING ANGLE POLES OR STRUCTURES. AT JUNCTION POLES AND OTHER CONTROL LOCATIONS, THE PROPOSED POLE LOCATION SHALL NOT BE FARTHER THAN TWENTY–FOUR (24) INCHES FROM THE EXISTING POLE WITHOUT APPROVAL FROM THE UTILITY OWNER. THE UTILITY CONTRACTOR SHALL ALSO BE RESPONSIBLE FOR THE BACK AND/OR FORWARD SPAN TANGENT POLE ALIGNMENT.

26. POLE DRILLING IS TO BE INCLUDED IN THE LABOR COST FOR THE POLE.

27. THE UTILITY CONTRACTOR IS RESPONSIBLE FOR CHECKING AND ENSURING THE PROPER PHASE ROTATION OF ALL THREE–PHASE MOTORS, ALONG WITH VOLTAGE AND PHASING TO OTHER LOADS, BEFORE AND AFTER CONSTRUCTION OF NEW FACILITIES. THE UTILITY CONTRACTOR SHALL MAINTAIN EXISTING PHASE CONNECTIONS FOR ALL CONDUCTORS, TRANSFORMERS, ETC. UNLESS OTHERWISE INDICATED ON THE DRAWINGS OR WITH THE CONSENT OF THE UTILITY OWNER/ENGINEER.

28. LOCKNUTS SHALL BACK UP ALL NUTS ON THREADED BOLTS SUCH AS MACHINE BOLTS, DOUBLE ARMING BOLTS, UPSET BOLTS, INSULATOR PINS, ETC. EXISTENCE OF LOCKNUTS WILL BE CLOSELY EXAMINED BY THE UTILITY OWNER DURING CONSTRUCTION. BOLTS SHALL NOT EXTEND MORE THAN TWO (2) INCHES FROM NUTS.

29. THE UTILITY CONTRACTOR SHALL INSTALL ALL NEW DOWNGUYS AT 3:2, UNLESS OTHERWISE NOTED ON THE DRAWINGS. ALL EXISTING–TO–REMAIN DOWNGUYS ARE TO BE RE–TENSIONED TO ACCOMODATE THE INSTALLATION OF NEW CONDUCTORS THROUGHOUT THE PROJECT.

30. THE UTILITY CONTRACTOR SHALL INSTALL FIBERGLASS INSULATOR GUYLINKS ON ALL DOWNGUYS WITHIN TWO (2) FEET OF PRIMARY CONDUCTORS.

31. ANY ANCHORS THAT ARE TO BE RETIRED SHALL HAVE THE ROD UNSCREWED AND REMOVED, OR BE CUT OFF AT LEAST EIGHTEEN (18) INCHES BELOW FINAL GRADE.

32. ANY GROUND RODS TO BE REMOVED SHALL BE PULLED, NOT CUT OFF.

33. GUY MARKERS ARE TO BE INSTALLED ON ALL NEW AND EXISTING–TO–REMAIN DOWN GUYS REQUIRED FOR THE PROJECT.

34. THE UTILITY OWNER/ENGINEER WILL PROVIDE ALL STAKING DATA, DESIGN TENSION AND SAG DATA AS REQUIRED. AFTER NEW FACILITIES ARE INSTALLED, UTILITY OWNER WILL VERIFY SAG ON INSTALLED CONDUCTOR.

35. THE UTILITY CONTRACTOR SHALL COORDINATE WITH THE UTILITY OWNER FOR VERIFICATION OF ALL POLE STAKING LOCATIONS PRIOR TO ANY POLE INSTALLATION ON THE PROJECT.

36. THE UTILITY CONTRACTOR SHALL PROVIDE THE UTILITY OWNER/ENGINEER WITH ONE (1) SET OF CLEAN, CLEARLY MARKED "AS–BUILT" DRAWINGS AT THE COMPLETION OF THE PROJECT. THESE DRAWINGS SHALL REFLECT ANY AND ALL CHANGES THAT WERE MADE TO THE FACILITIES DURING CONSTRUCTION.

37. THE UTILITY CONTRACTOR IS RESPONSIBLE FOR REVIEWING ALL CONSTRUCTION DRAWINGS AND TECHNICAL SPECIFICATIONS FOR THE RELOCATION OF FACILITIES PRIOR TO BIDDING THE PROJECT. ANY QUESTIONS CONCERNING INFORMATION SHOWN IN THE CONTRACT DOCUMENTS SHALL BE ADDRESSED TO THE UTILITY OWNER/ENGINEER PRIOR TO BIDDING ON THE PROJECT.

38. ALL INSTALLED POLES SHALL HAVE A POLE TAG WITH THE NAME OF THE UTILITY OWNER AFFIXED TO THE POLE. IN ADDITION, ANY EXISTING POLES THAT ARE REMOVED FROM THE PROJECT SHALL HAVE THE EXITING POLE TAGS REMOVED. THE UTILITY CONTRACTOR SHALL BE RESPONSIBLE FOR INSTALLING ALL POLE NUMBERS, EQUIPMENT NUMBERS AND PHASE MARKERS WHERE NECESSARY ALONG THE LENGTH OF THE PROJECT.

39. UTILITY CONTRACTOR WILL BE RESPONSIBLE FOR INSPECTING EACH REEL OF CONDUCTOR FOR THE PROJECT. ANY DAMAGE TO THE CONDUCTOR SHALL BE REMOVED AND SPLICED AS REQUIRED. ALL CONDUCTOR SHALL BE PROTECTED FROM EQUIPMENT OR VEHICLE TRAFFIC WHILE BEING INSTALLED.

40. ROLLERS AND BLOCKS SHALL BE INSPECTED PRIOR TO INSTALLATION OF CONDUCTOR TO PREVENT BINDING OR ANY OTHER DAMAGE DURING STRINGING.

CLEARING AND TRIMMING

1. UTILITY CONTRACTOR SHALL PROVIDE ALL NECESSARY TOOLS, EQUIPMENT AND MATERIALS NECESSARY TO CUT, TRIM, AND/OR REMOVE REQUIRED TREES IN "NON MAINLINE" AREAS OUTSIDE OF RIGHT–OF–WAY AS INDICATED ON THE DRAWINGS. DEBRIS RESULTING FROM SUCH WORK SHALL BE DISPOSED OF DAILY FROM THE PROJECT SITE. DEBRIS SHALL INCLUDE BUT NOT BE LIMITED TO BRUSH, WOOD, LIMBS, LOGS AND LEAVES.

2. UTILITY CONTRACTOR SHALL PERFORM ALL WORK TO THE SATISFACTION OF THE UTILITY OWNER AND IN ACCORDANCE WITH ALL FEDERAL, STATE, COUNTY, MUNICIPAL AND OTHER LOCAL LAWS, ORDINANCES, RULES AND REGULATIONS APPLICABLE TO THE WORK BEING PERFORMED, AS WELL AS WITH THE AMERICAN NATIONAL STANDARDS INSTITUTE Z133.1 AND A300.

3. TREE TRIMMING AND CUTTING SHALL BE DONE IN ORDER TO OBTAIN TEN (10) FEET OF CLEARANCE ON BOTH SIDES OF THE PRIMARY LINE FROM THE GROUND TO THE SKY EXCEPT WHERE OTHERWISE SPECIFIED WITHIN THE CONTRACT DOCUMENTS.

4. ALL GROWTH SHALL BE CLEARED WITHIN FIVE (5) FEET OF ALL SERVICE CONDUCTORS WITH THE USE OF LATERAL PRUNING ONLY, UNLESS OTHERWISE INSTRUCTED BY THE UTILITY OWNER.

5. ALL STRUCTURES SHALL BE CLEARED WITHIN A TEN (10) FOOT RADIUS OF THE STRUCTURE. ALL DOWN GUYS, ANCHORS, SPAN GUYS, ETC. SHALL BE CLEARED WITHIN A FIVE (5) FOOT RADIUS OF THE STRUCTURE.

6. FOR ALL TREES THAT ARE CUT, THE UTILITY CONTRACTOR SHALL ENSURE THAT THE TREES ARE CUT FLUSH WITH THE GROUND.

7. UTILITY CONTRACTOR SHALL PERFORM ALL WORK IN A REASONABLE, SAFE AND SECURE FASHION TO COMPLY, AT A MINIMUM, WITH ALL SAFETY AND SECURITY REQUIREMENTS OF ALL GOVERNMENT AUTHORITIES AND TO PERFORM THE WORK IN SUCH A MATTER AS TO PREVENT ACCIDENTS TO THE PUBLIC OR ANY DAMAGE TO PROPERTY.

8. ALL WORK IS TO BE DONE WHILE THE FACILITIES ARE ENERGIZED, AND THEREFORE, THE UTILITY CONTRACTOR SHALL GUARD AGAINST INTERFERENCE WITH THE NORMAL OPERATION OF THE ELECTRICAL FACILITIES TO ENSURE THERE IS NO DAMAGE TO ENERGIZED CIRCUITS.

9. THE UTILITY OWNER WILL PROVIDE ALL MAINLINE TREE TRIMMING, AND PERSONNEL TO SUPERVISE ANY NECESSARY ADDITIONAL TRIMMING, IN ORDER TO ENSURE THAT THE WORK IS BEING DONE IN ACCORDANCE WITH THE REQUIREMENTS OF THE UTILITY OWNER AS WELL AS THE CUSTOMERS THAT ARE AFFECTED.

10. UTILITY CONTRACTOR SHALL BE REQUIRED TO MEET WITH THE PERSONNEL ASSIGNED TO THE PROJECT BY THE UTILITY OWNER FOR THE FACILITIES THAT ARE BEING INSTALLED PRIOR TO ANY TREE TRIMMING OFF OF RIGHT–OF–WAY ALONG THE PROJECT.

G S & P

Design Services For The Built Environment

Atlanta
Birmingham
Chipley
Cincinnati
Columbus
Dallas
Fort Lauderdale
Jackson
Jacksonville
Knoxville
Louisville
Memphis
Nashville
Richmond
Tampa

GRESHAM SMITH AND PARTNERS

2095 Lakeside Centre Way, Suite 120
Knoxville, Tennessee 37922
865.521.6777

WWW.GSPNET.COM

OVERHEAD 13kV HENDRIX DESIGN
GUM HOLLOW ROAD AND
NORTH ILLINOIS AVENUE
OAK RIDGE, TENNESSEE

REVISION		
No.	Date	Revision

JOHN B. WHARTON
REGISTERED ENGINEER
COMMISSION NO.
STATE OF TENNESSEE
2-17-16

GENERAL CONSTRUCTION NOTES

E1.1

SCALE: NONE
PROJECT: 41689.01
DATE: 2015

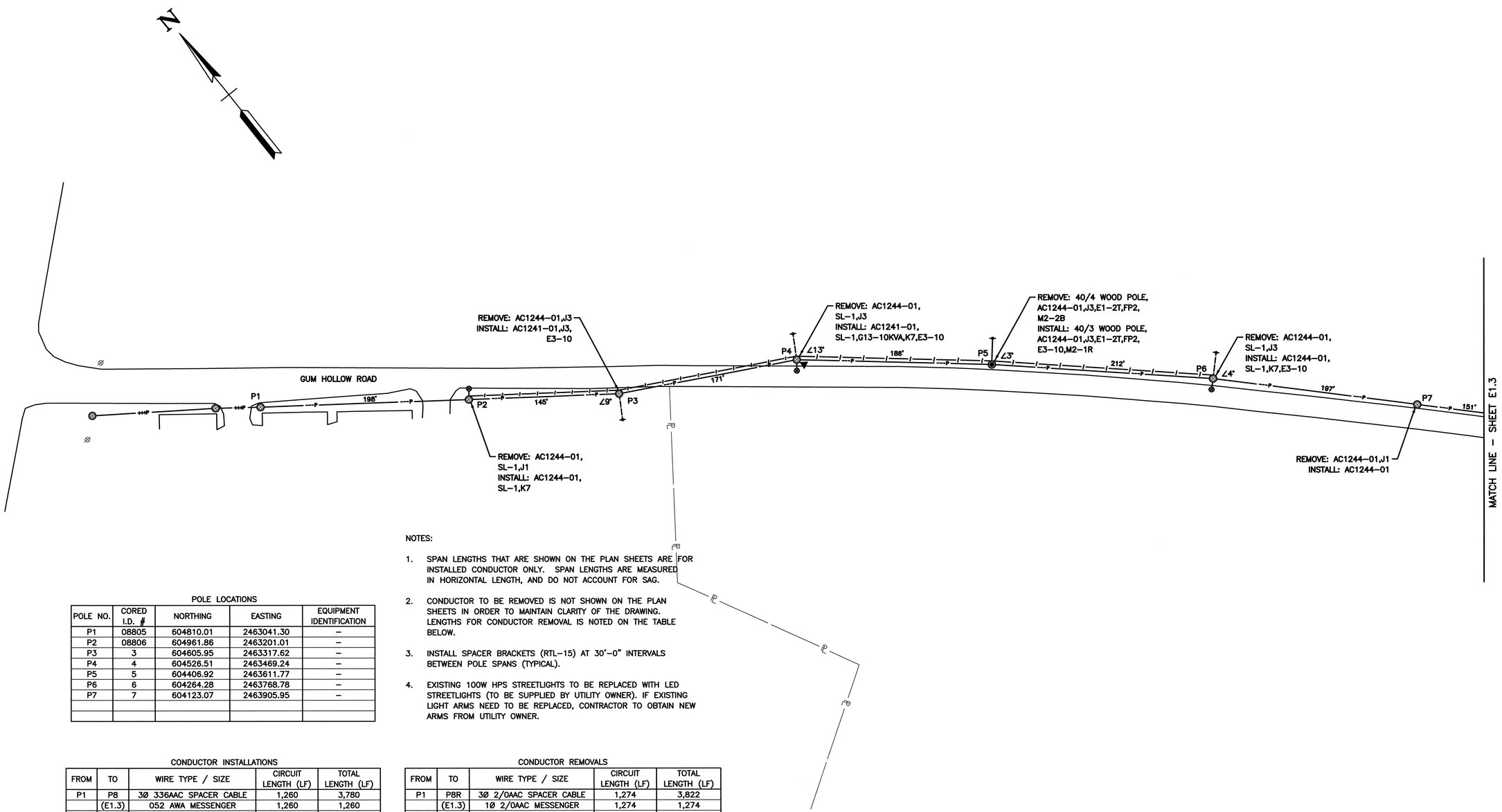

NOTES:

1. SPAN LENGTHS THAT ARE SHOWN ON THE PLAN SHEETS ARE FOR INSTALLED CONDUCTOR ONLY. SPAN LENGTHS ARE MEASURED IN HORIZONTAL LENGTH, AND DO NOT ACCOUNT FOR SAG.
2. CONDUCTOR TO BE REMOVED IS NOT SHOWN ON THE PLAN SHEETS IN ORDER TO MAINTAIN CLARITY OF THE DRAWING. LENGTHS FOR CONDUCTOR REMOVAL IS NOTED ON THE TABLE BELOW.
3. INSTALL SPACER BRACKETS (RTL-15) AT 30'-0" INTERVALS BETWEEN POLE SPANS (TYPICAL).
4. EXISTING 100W HPS STREETLIGHTS TO BE REPLACED WITH LED STREETLIGHTS (TO BE SUPPLIED BY UTILITY OWNER). IF EXISTING LIGHT ARMS NEED TO BE REPLACED, CONTRACTOR TO OBTAIN NEW ARMS FROM UTILITY OWNER.

POLE LOCATIONS

POLE NO.	CORED I.D. #	NORTHING	EASTING	EQUIPMENT IDENTIFICATION
P1	08805	604810.01	2463041.30	–
P2	08806	604961.86	2463201.01	–
P3	3	604605.95	2463317.62	–
P4	4	604526.51	2463469.24	–
P5	5	604406.92	2463611.77	–
P6	6	604264.28	2463768.78	–
P7	7	604123.07	2463905.95	–

CONDUCTOR INSTALLATIONS

FROM	TO	WIRE TYPE / SIZE	CIRCUIT LENGTH (LF)	TOTAL LENGTH (LF)
P1	P8	3Ø 336AAC SPACER CABLE	1,260	3,780
	(E1.3)	052 AWA MESSENGER	1,260	1,260
		1Ø 336AAC NEUTRAL	1,260	1,260
P2	P6	#6 DUPLEX LIGHTING CIRCUIT	714	714

CONDUCTOR REMOVALS

FROM	TO	WIRE TYPE / SIZE	CIRCUIT LENGTH (LF)	TOTAL LENGTH (LF)
P1	P8R	3Ø 2/0AAC SPACER CABLE	1,274	3,822
	(E1.3)	1Ø 2/0AAC MESSENGER	1,274	1,274
		O.W. LIGHTING CIRCUIT	1,274	1,274

G S & P

Design Services For The Built Environment

Atlanta
Birmingham
Chipley
Cincinnati
Columbus
Dallas
Fort Lauderdale
Jackson
Jacksonville
Knoxville
Louisville
Memphis
Nashville
Richmond
Tampa

GRESHAM SMITH AND PARTNERS

2095 Lakeside Centre Way, Suite 120
Knoxville, Tennessee 37922
865.521.6777

WWW.GSPNET.COM

OVERHEAD 13kV HENDRIX DESIGN
GUM HOLLOW ROAD
OAK RIDGE, TENNESSEE

REVISION

No.	Date	Revision

JOHN B. WHARTON
REGISTERED ENGINEER
AGRICULTURE
COMMERCE
NO. 18011
STATE OF TENNESSEE
2-17-16

PROPOSED ELECTRIC
(SHEET 1 OF 8)

E1.2

SCALE: 1"=50'
PROJECT: 41089.01
DATE: 2015

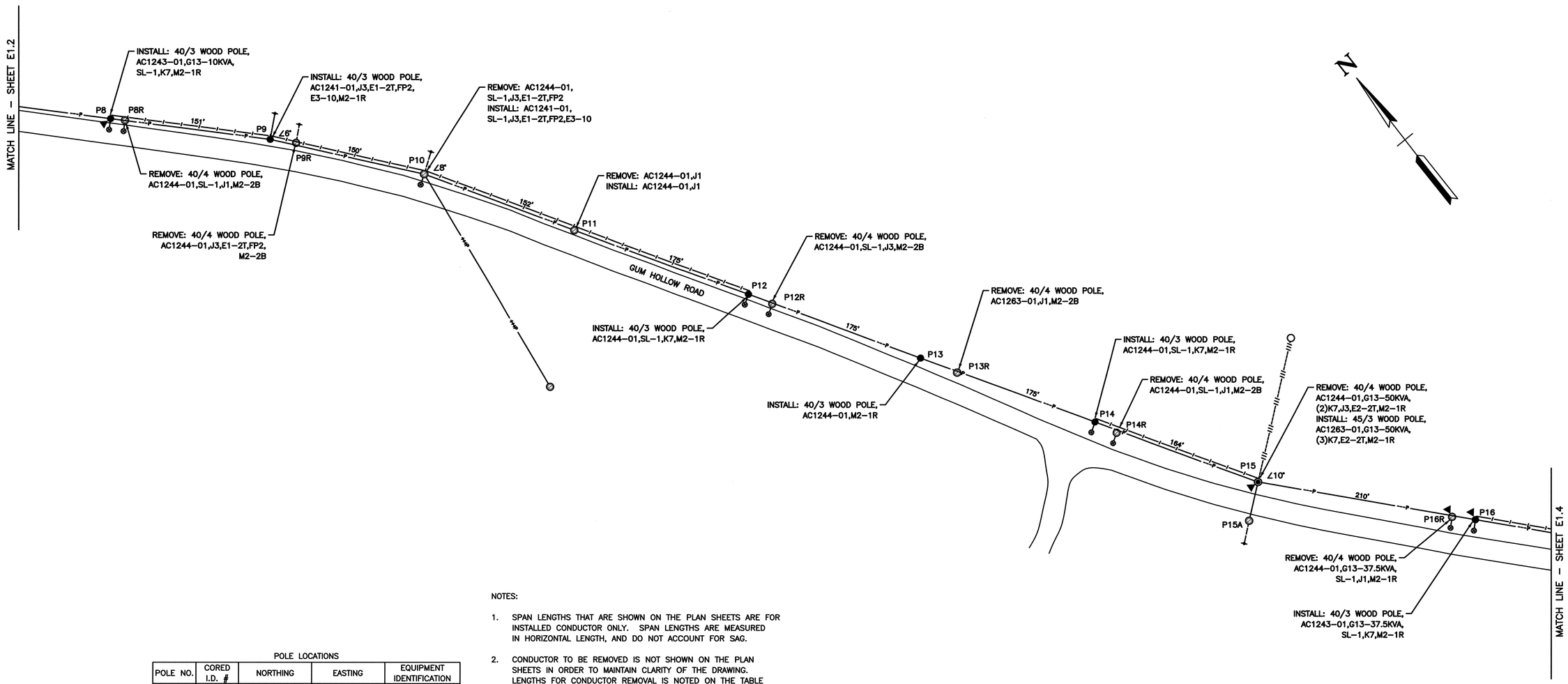

POLE LOCATIONS

POLE NO.	CORED I.D. #	NORTHING	EASTING	EQUIPMENT IDENTIFICATION
P8	4/8	604014.40	2464010.96	–
P9	8	603905.73	2464115.97	–
P10	5/9	603788.82	2464209.94	–
P11	08768	603658.68	2464287.99	–
P12	6	603509.00	2464378.66	–
P13	12	603359.33	2464469.33	–
P14	13	603209.65	2464560.01	–
P15	7/14	603068.88	2464645.29	1208–B
P16	15	602911.95	2464784.84	1209–B

NOTES:

1. SPAN LENGTHS THAT ARE SHOWN ON THE PLAN SHEETS ARE FOR INSTALLED CONDUCTOR ONLY. SPAN LENGTHS ARE MEASURED IN HORIZONTAL LENGTH, AND DO NOT ACCOUNT FOR SAG.
2. CONDUCTOR TO BE REMOVED IS NOT SHOWN ON THE PLAN SHEETS IN ORDER TO MAINTAIN CLARITY OF THE DRAWING. LENGTHS FOR CONDUCTOR REMOVAL IS NOTED ON THE TABLE BELOW.
3. INSTALL SPACER BRACKETS (RTL–15) AT 30'–0" INTERVALS BETWEEN POLE SPANS (TYPICAL).
4. EXISTING 100W HPS STREETLIGHTS TO BE REPLACED WITH LED STREETLIGHTS (TO BE SUPPLIED BY UTILITY OWNER). IF EXISTING LIGHT ARMS NEED TO BE REPLACED, CONTRACTOR TO OBTAIN NEW ARMS FROM UTILITY OWNER.

CONDUCTOR INSTALLATIONS

FROM	TO	WIRE TYPE / SIZE	CIRCUIT LENGTH (LF)	TOTAL LENGTH (LF)
P8	P16	3Ø 336AAC SPACER CABLE	1,352	4,056
		052 AWA MESSENGER	1,352	1,352
		1Ø 336AAC NEUTRAL	1,352	1,352
P8	P12	#6 DUPLEX LIGHTING CIRCUIT	628	628

CONDUCTOR REMOVALS

FROM	TO	WIRE TYPE / SIZE	CIRCUIT LENGTH (LF)	TOTAL LENGTH (LF)
P8R	P16R	3Ø 2/0AAC SPACER CABLE	1,317	3,951
		1Ø 2/0AAC MESSENGER	1,317	1,317
		O.W. LIGHTING CIRCUIT	1,317	1,317

G S & P

Design Services For The Built Environment

Atlanta
Birmingham
Chipley
Cincinnati
Columbus
Dallas
Fort Lauderdale
Jackson
Jacksonville
Knoxville
Louisville
Memphis
Nashville
Richmond
Tampa

GRESHAM SMITH AND PARTNERS

2095 Lakeside Centre Way, Suite 120
Knoxville, Tennessee 37922
865.521.6777

WWW.GSPNET.COM

OVERHEAD 13kV HENDRIX DESIGN
GUM HOLLOW ROAD
OAK RIDGE, TENNESSEE

REVISION

No.	Date	Revision

JOHN B. WHARTON
REGISTERED ENGINEER
No. 101711
COMMERCE
STATE OF TENNESSEE
2-17-16

PROPOSED ELECTRIC
(SHEET 2 OF 8)

E1.3

SCALE: 1"=50'
PROJECT: 41089.01
DATE: 2015

NOTES:

1. SPAN LENGTHS THAT ARE SHOWN ON THE PLAN SHEETS ARE FOR INSTALLED CONDUCTOR ONLY. SPAN LENGTHS ARE MEASURED IN HORIZONTAL LENGTH, AND DO NOT ACCOUNT FOR SAG.
2. CONDUCTOR TO BE REMOVED IS NOT SHOWN ON THE PLAN SHEETS IN ORDER TO MAINTAIN CLARITY OF THE DRAWING. LENGTHS FOR CONDUCTOR REMOVAL IS NOTED ON THE TABLE BELOW.
3. INSTALL SPACER BRACKETS (RTL–15) AT 30'–0" INTERVALS BETWEEN POLE SPANS (TYPICAL).
4. EXISTING 100W HPS STREETLIGHTS TO BE REPLACED WITH LED STREETLIGHTS (TO BE SUPPLIED BY UTILITY OWNER). IF EXISTING LIGHT ARMS NEED TO BE REPLACED, CONTRACTOR TO OBTAIN NEW ARMS FROM UTILITY OWNER.

POLE LOCATIONS

POLE NO.	CORED I.D. #	NORTHING	EASTING	EQUIPMENT IDENTIFICATION
P17	8	602755.03	2464924.39	–
P18	6	602598.10	2465063.94	1228
P19	7	602440.48	2465204.11	–
P20	8	602265.90	2465323.56	1303–A
P21	9	602100.80	2465435.37	–
P22	10	601906.43	2465499.56	–
P23	–	601714.42	2465467.75	–

CONDUCTOR INSTALLATIONS

FROM	TO	WIRE TYPE / SIZE	CIRCUIT LENGTH (LF)	TOTAL LENGTH (LF)
P16	P23	3Ø 336AAC SPACER CABLE	1,462	4,386
(E1.3)		052 AWA MESSENGER	1,462	1,462
		1Ø 336AAC NEUTRAL	1,462	1,462
P16	P20	#6 DUPLEX LIGHTING CIRCUIT	863	863
(E1.3)				
P22	P23	#6 DUPLEX LIGHTING CIRCUIT	195	195

CONDUCTOR REMOVALS

FROM	TO	WIRE TYPE / SIZE	CIRCUIT LENGTH (LF)	TOTAL LENGTH (LF)
P16R	P23	3Ø 2/0AAC SPACER CABLE	1,463	4,389
		1Ø 2/0AAC MESSENGER	1,463	1,463
		O.W. LIGHTING CIRCUIT	1,463	1,463

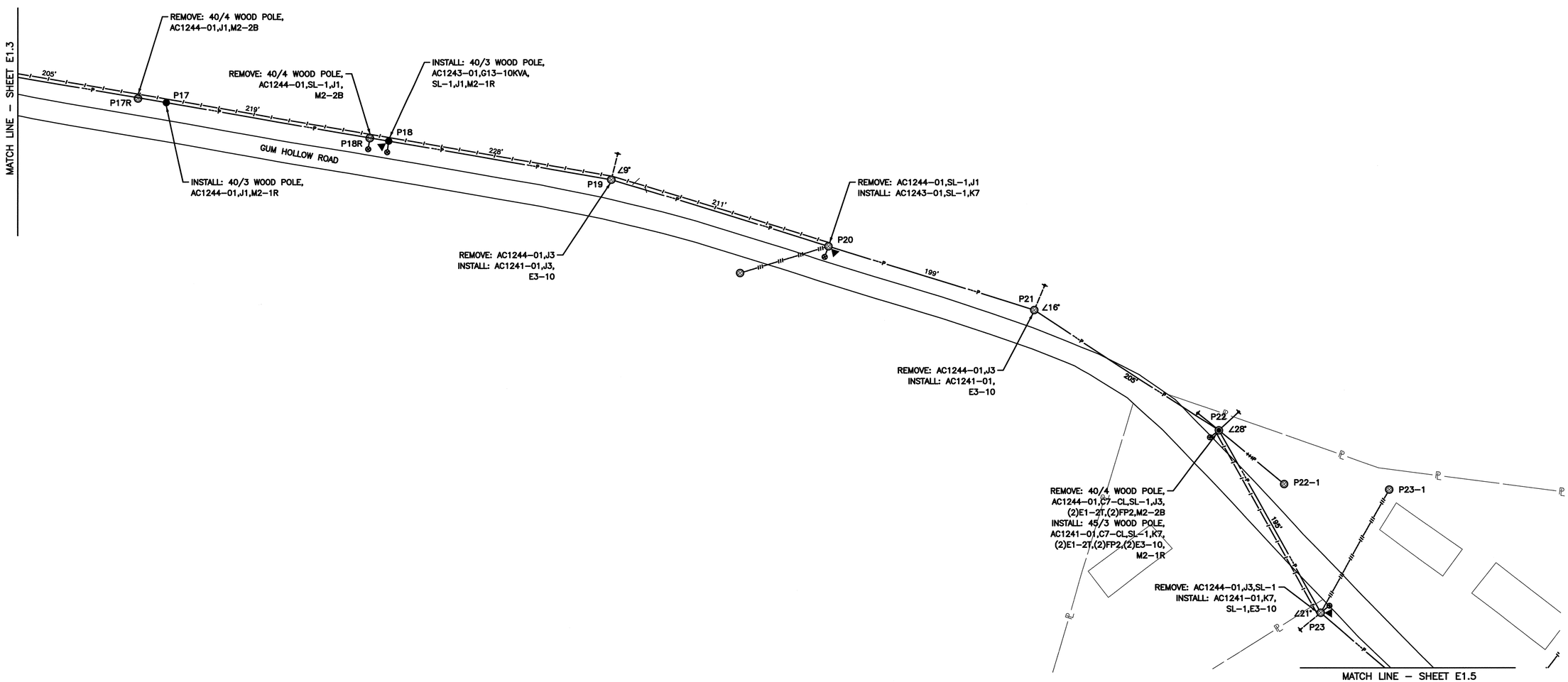

G S & P

Design Services For The Built Environment

Atlanta
Birmingham
Chipley
Cincinnati
Columbus
Dallas
Fort Lauderdale
Jackson
Jacksonville
Knoxville
Louisville
Memphis
Nashville
Richmond
Tampa

GRESHAM SMITH AND PARTNERS
2095 Lakeside Centre Way, Suite 120
Knoxville, Tennessee 37922
865.521.6777
WWW.GSPNET.COM

OVERHEAD 13kV HENDRIX DESIGN
GUM HOLLOW ROAD
OAK RIDGE, TENNESSEE

REVISION		
No.	Date	Revision

JOHN B. WHARTON REGISTERED ENGINEER NO. 18071 STATE OF TENNESSEE 2/17/16

PROPOSED ELECTRIC
(SHEET 3 OF 8)

E1.4

SCALE: 1"=50'
PROJECT: 41089.01
DATE: 2015

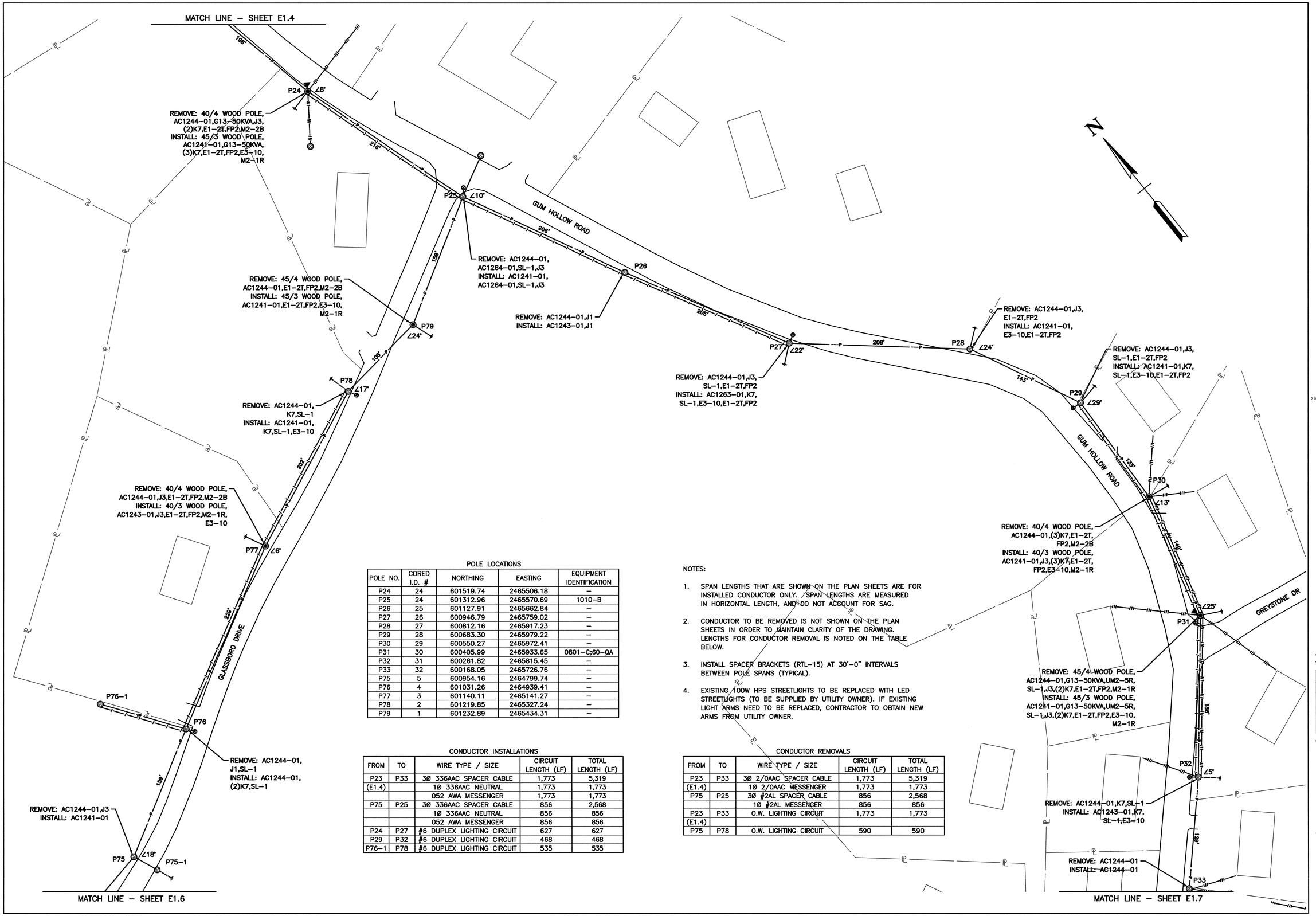

POLE LOCATIONS

POLE NO.	CORED I.D. #	NORTHING	EASTING	EQUIPMENT IDENTIFICATION
P24	24	601519.74	2465506.18	–
P25	24	601312.96	2465570.69	1010–B
P26	25	601127.91	2465662.84	–
P27	26	600946.79	2465759.02	–
P28	27	600812.16	2465917.23	–
P29	28	600683.30	2465979.22	–
P30	29	600550.27	2465972.41	–
P31	30	600405.99	2465933.65	0801–C;60–QA
P32	31	600261.82	2465815.45	–
P33	32	600168.05	2465726.76	–
P75	5	600954.16	2464799.74	–
P76	4	601031.26	2464939.41	–
P77	3	601140.11	2465141.27	–
P78	2	601219.85	2465327.24	–
P79	1	601232.89	2465434.31	–

CONDUCTOR INSTALLATIONS

FROM	TO	WIRE TYPE / SIZE	CIRCUIT LENGTH (LF)	TOTAL LENGTH (LF)
P23	P33	3Ø 336AAC SPACER CABLE	1,773	5,319
(E1.4)		1Ø 336AAC NEUTRAL	1,773	1,773
		052 AWA MESSENGER	1,773	1,773
P75	P25	3Ø 336AAC SPACER CABLE	856	2,568
		1Ø 336AAC NEUTRAL	856	856
		052 AWA MESSENGER	856	856
P24	P27	#6 DUPLEX LIGHTING CIRCUIT	627	627
P29	P32	#6 DUPLEX LIGHTING CIRCUIT	468	468
P76–1	P78	#6 DUPLEX LIGHTING CIRCUIT	535	535

NOTES:

1. SPAN LENGTHS THAT ARE SHOWN ON THE PLAN SHEETS ARE FOR INSTALLED CONDUCTOR ONLY. SPAN LENGTHS ARE MEASURED IN HORIZONTAL LENGTH, AND DO NOT ACCOUNT FOR SAG.
2. CONDUCTOR TO BE REMOVED IS NOT SHOWN ON THE PLAN SHEETS IN ORDER TO MAINTAIN CLARITY OF THE DRAWING. LENGTHS FOR CONDUCTOR REMOVAL IS NOTED ON THE TABLE BELOW.
3. INSTALL SPACER BRACKETS (RTL–15) AT 30'–0" INTERVALS BETWEEN POLE SPANS (TYPICAL).
4. EXISTING 100W HPS STREETLIGHTS TO BE REPLACED WITH LED STREETLIGHTS (TO BE SUPPLIED BY UTILITY OWNER). IF EXISTING LIGHT ARMS NEED TO BE REPLACED, CONTRACTOR TO OBTAIN NEW ARMS FROM UTILITY OWNER.

CONDUCTOR REMOVALS

FROM	TO	WIRE TYPE / SIZE	CIRCUIT LENGTH (LF)	TOTAL LENGTH (LF)
P23	P33	3Ø 2/0AAC SPACER CABLE	1,773	5,319
(E1.4)		1Ø 2/0AAC MESSENGER	1,773	1,773
P75	P25	3Ø #2AL SPACER CABLE	856	2,568
		1Ø #2AL MESSENGER	856	856
P23	P33	O.W. LIGHTING CIRCUIT	1,773	1,773
(E1.4)				
P75	P78	O.W. LIGHTING CIRCUIT	590	590

G S & P

Design Services For The Built Environment

Atlanta
Birmingham
Chipley
Cincinnati
Columbus
Dallas
Fort Lauderdale
Jackson
Jacksonville
Knoxville
Louisville
Memphis
Nashville
Richmond
Tampa

GRESHAM SMITH AND PARTNERS
2095 Lakeside Centre Way, Suite 120
Knoxville, Tennessee 37922
865.521.6777
WWW.GSPNET.COM

OVERHEAD 13kV HENDRIX DESIGN
GUM HOLLOW ROAD
OAK RIDGE, TENNESSEE

REVISION

No.	Date	Revision

JOHN B. WHARTON REGISTERED ENGINEER COMMISSION NO. 18371 STATE OF TENNESSEE
2-17-16

PROPOSED ELECTRIC
(SHEET 4 OF 8)

E1.5

SCALE: 1"=50'
PROJECT: 41089.01
DATE: 2015

NOTES:

1. SPAN LENGTHS THAT ARE SHOWN ON THE PLAN SHEETS ARE FOR INSTALLED CONDUCTOR ONLY. SPAN LENGTHS ARE MEASURED IN HORIZONTAL LENGTH, AND DO NOT ACCOUNT FOR SAG.
2. CONDUCTOR TO BE REMOVED IS NOT SHOWN ON THE PLAN SHEETS IN ORDER TO MAINTAIN CLARITY OF THE DRAWING. LENGTHS FOR CONDUCTOR REMOVAL IS NOTED ON THE TABLE BELOW.
3. INSTALL SPACER BRACKETS (RTL-15) AT 30'-0" INTERVALS BETWEEN POLE SPANS (TYPICAL).
4. EXISTING 100W HPS STREETLIGHTS TO BE REPLACED WITH LED STREETLIGHTS (TO BE SUPPLIED BY UTILITY OWNER). IF EXISTING LIGHT ARMS NEED TO BE REPLACED, CONTRACTOR TO OBTAIN NEW ARMS FROM UTILITY OWNER.

POLE LOCATIONS

POLE NO.	CORED I.D. #	NORTHING	EASTING	EQUIPMENT IDENTIFICATION
P69	–	602911.95	2464784.84	–
P70	10	602911.95	2464784.84	11103
P71	–	602911.95	2464784.84	–
P72	8	602911.95	2464784.84	–
P73	7	602911.95	2464784.84	–
P74	6	602911.95	2464784.84	–

CONDUCTOR INSTALLATIONS

FROM	TO	WIRE TYPE / SIZE	CIRCUIT LENGTH (LF)	TOTAL LENGTH (LF)
P68	P75	3Ø 336AAC SPACER CABLE	1,227	3,681
(E1.8)	(E1.5)	1Ø 336AAC NEUTRAL	1,227	1,227
		052 AWA MESSENGER	1,227	1,227
P72	P74	#6 DUPLEX LIGHTING CIRCUIT	294	294

CONDUCTOR REMOVALS

FROM	TO	WIRE TYPE / SIZE	CIRCUIT LENGTH (LF)	TOTAL LENGTH (LF)
P68	P75	3Ø 2/0AAC SPACER CABLE	1,227	3,681
(E1.8)	(E1.5)	1Ø 2/0AAC MESSENGER	1,227	1,227
P72	P75	O.W. LIGHTING CIRCUIT	499	499
	(E1.4)			

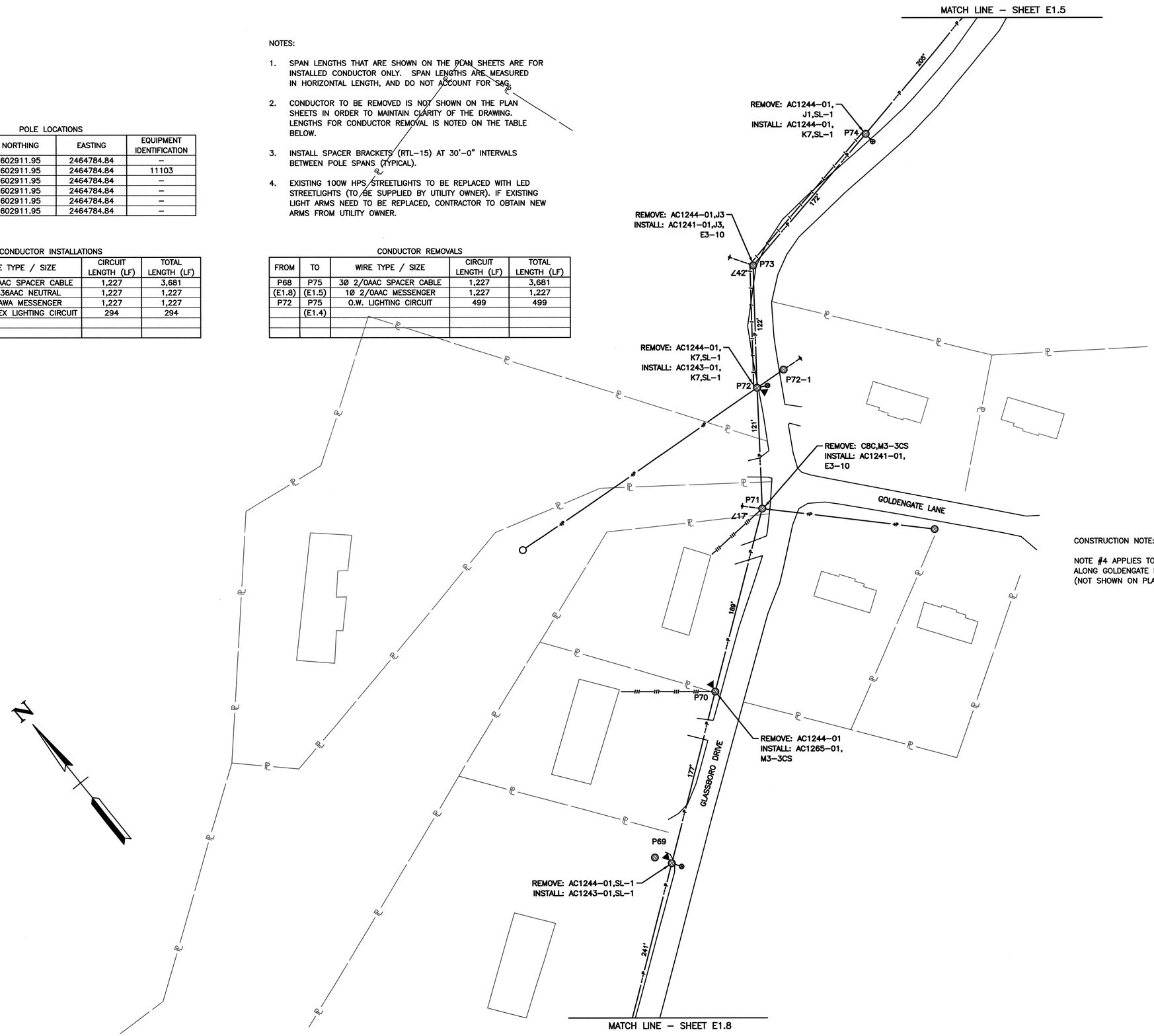

CONSTRUCTION NOTE:

NOTE #4 APPLIES TO ALL EXISTING STREETLIGHTS ALONG GOLDENGATE LANE AND GARNET LANE (NOT SHOWN ON PLAN SHEETS).

G S & P

Design Services For The Built Environment

Atlanta
Birmingham
Chipley
Cincinnati
Columbus
Dallas
Fort Lauderdale
Jackson
Jacksonville
Knoxville
Louisville
Memphis
Nashville
Richmond
Tampa

GRESHAM SMITH AND PARTNERS
2095 Lakeside Centre Way, Suite 120
Knoxville, Tennessee 37922
865.521.6777
WWW.GSPNET.COM

OVERHEAD 13kV HENDRIX DESIGN
GUM HOLLOW ROAD
OAK RIDGE, TENNESSEE

REVISION

No.	Date	Revision

JOHN B. WHARTON
REGISTERED ENGINEER
COMMERCE
NO. 18571
STATE OF TENNESSEE
2-17-16

PROPOSED ELECTRIC
(SHEET 5 OF 8)

E1.6

SCALE: 1"=50'
PROJECT: 41089.01
DATE: 2015

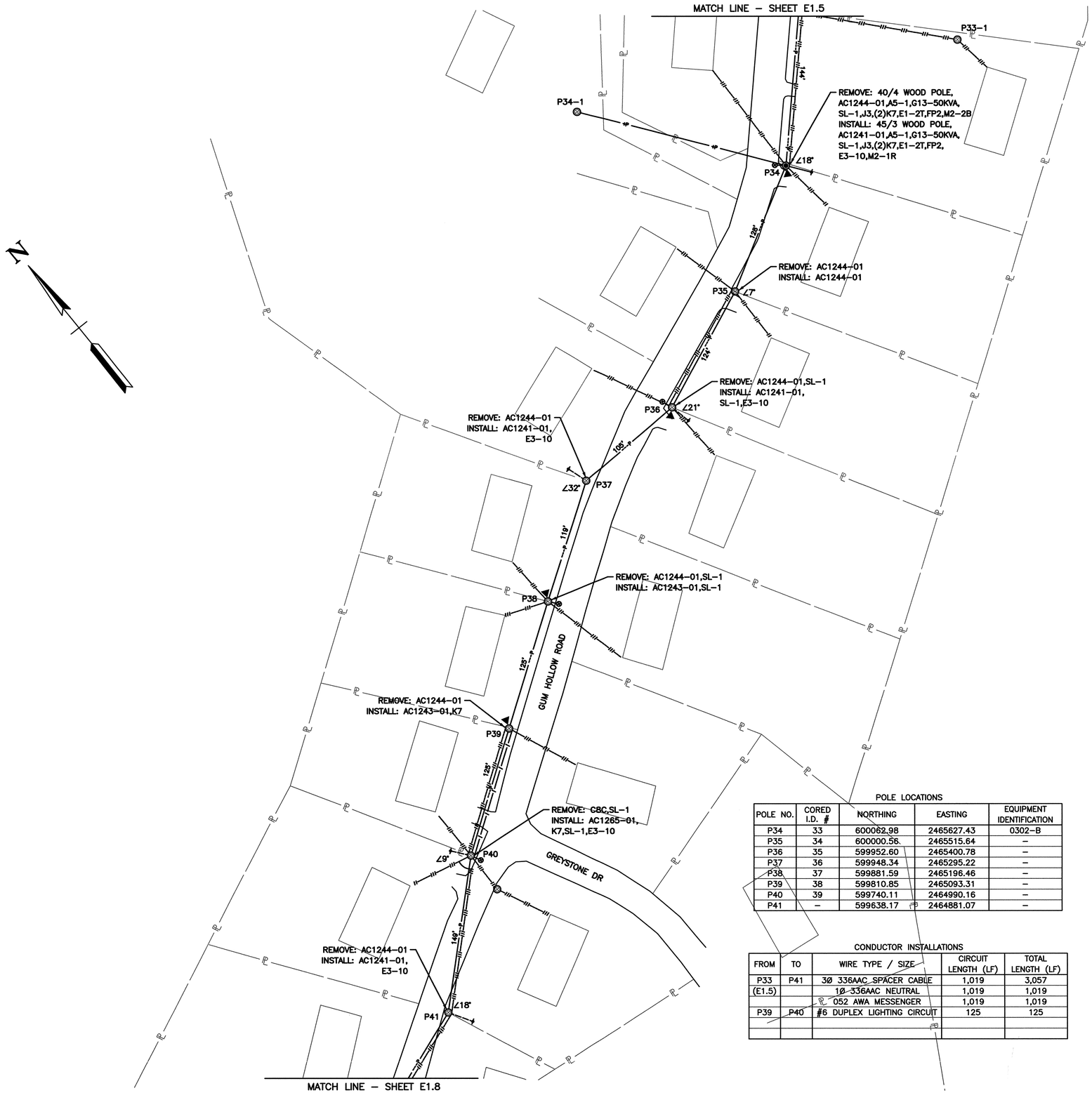

POLE LOCATIONS

POLE NO.	CORED I.D. #	NORTHING	EASTING	EQUIPMENT IDENTIFICATION
P34	33	600062.98	2465627.43	0302–B
P35	34	600000.56	2465515.64	–
P36	35	599952.60	2465400.78	–
P37	36	599948.34	2465295.22	–
P38	37	599881.59	2465196.46	–
P39	38	599810.85	2465093.31	–
P40	39	599740.11	2464990.16	–
P41	–	599638.17	2464881.07	–

CONDUCTOR INSTALLATIONS

FROM	TO	WIRE TYPE / SIZE	CIRCUIT LENGTH (LF)	TOTAL LENGTH (LF)
P33	P41	3Ø 336AAC SPACER CABLE	1,019	3,057
(E1.5)		1Ø 336AAC NEUTRAL	1,019	1,019
		052 AWA MESSENGER	1,019	1,019
P39	P40	#6 DUPLEX LIGHTING CIRCUIT	125	125

NOTES:

1. SPAN LENGTHS THAT ARE SHOWN ON THE PLAN SHEETS ARE FOR INSTALLED CONDUCTOR ONLY. SPAN LENGTHS ARE MEASURED IN HORIZONTAL LENGTH, AND DO NOT ACCOUNT FOR SAG.
2. CONDUCTOR TO BE REMOVED IS NOT SHOWN ON THE PLAN SHEETS IN ORDER TO MAINTAIN CLARITY OF THE DRAWING. LENGTHS FOR CONDUCTOR REMOVAL IS NOTED ON THE TABLE BELOW.
3. INSTALL SPACER BRACKETS (RTL–15) AT 30'–0" INTERVALS BETWEEN POLE SPANS (TYPICAL).
4. EXISTING 100W HPS STREETLIGHTS TO BE REPLACED WITH LED STREETLIGHTS (TO BE SUPPLIED BY UTILITY OWNER). IF EXISTING LIGHT ARMS NEED TO BE REPLACED, CONTRACTOR TO OBTAIN NEW ARMS FROM UTILITY OWNER.

CONDUCTOR REMOVALS

FROM	TO	WIRE TYPE / SIZE	CIRCUIT LENGTH (LF)	TOTAL LENGTH (LF)
P33	P41	3Ø 2/0AAC SPACER CABLE	1,019	3,057
(E1.5)		1Ø 2/0AAC MESSENGER	1,019	1,019

G S & P

Design Services For The Built Environment

Atlanta
Birmingham
Chipley
Cincinnati
Columbus
Dallas
Fort Lauderdale
Jackson
Jacksonville
Knoxville
Louisville
Memphis
Nashville
Richmond
Tampa

GRESHAM SMITH AND PARTNERS

2095 Lakeside Centre Way, Suite 120
Knoxville, Tennessee 37922
865.521.6777

WWW.GSPNET.COM

OVERHEAD 13kV HENDRIX DESIGN
GUM HOLLOW ROAD
OAK RIDGE, TENNESSEE

REVISION		
No.	Date	Revision

JOHN B. WHARTON
REGISTERED ENGINEER
AGRICULTURE
COMMERCE
NO. 18871
STATE OF TENNESSEE
2-17-16

PROPOSED ELECTRIC
(SHEET 6 OF 8)

E1.7

SCALE: 1"=50'
PROJECT: 41099.01
DATE: 2015

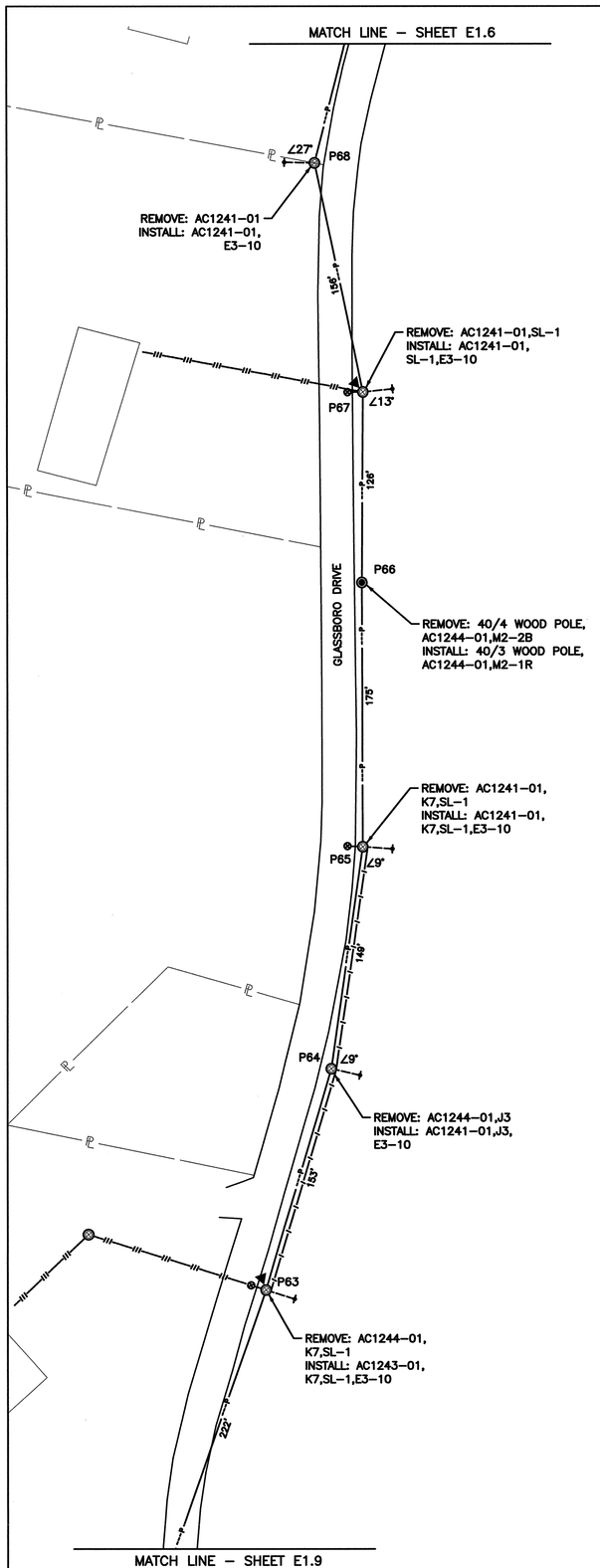

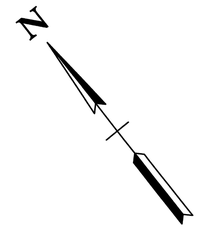

POLE LOCATIONS

POLE NO.	CORED I.D. #	NORTHING	EASTING	EQUIPMENT IDENTIFICATION
P42	–	599592.22	2464754.76	2401–B
P43	–	599512.46	2464650.53	–
P44	–	599418.53	2464562.39	–
P45	–	599323.87	2464474.70	2002–B
P46	–	599231.57	2464384.50	–
P47	–	599137.12	2464292.16	–
P48	–	598953.63	2464151.61	1503–B
P63	–	599754.84	2463306.77	–
P64	–	599842.42	2463432.62	–
P65	–	599944.32	2463541.42	–
P66	–	600081.89	2463650.52	–
P67	–	600180.37	2463730.09	–
P68	–	600319.76	2463799.46	–

CONDUCTOR INSTALLATIONS

FROM	TO	WIRE TYPE / SIZE	CIRCUIT LENGTH (LF)	TOTAL LENGTH (LF)
P41	P48	3Ø 336AAC SPACER CABLE	1,015	3,045
(E1.7)		1Ø 336AAC NEUTRAL	1,015	1,015
		052 AWA MESSENGER	1,015	1,015
P62	P68	3Ø 336AAC SPACER CABLE	981	2,943
(E1.9)		1Ø 336AAC NEUTRAL	981	981
		052 AWA MESSENGER	981	981
P45	P46	#6 DUPLEX LIGHTING CIRCUIT	129	129
P63	P65	#6 DUPLEX LIGHTING CIRCUIT	302	302

NOTES:

1. SPAN LENGTHS THAT ARE SHOWN ON THE PLAN SHEETS ARE FOR INSTALLED CONDUCTOR ONLY. SPAN LENGTHS ARE MEASURED IN HORIZONTAL LENGTH, AND DO NOT ACCOUNT FOR SAG.
2. CONDUCTOR TO BE REMOVED IS NOT SHOWN ON THE PLAN SHEETS IN ORDER TO MAINTAIN CLARITY OF THE DRAWING. LENGTHS FOR CONDUCTOR REMOVAL IS NOTED ON THE TABLE BELOW.
3. INSTALL SPACER BRACKETS (RTL–15) AT 30'–0" INTERVALS BETWEEN POLE SPANS (TYPICAL).
4. EXISTING 100W HPS STREETLIGHTS TO BE REPLACED WITH LED STREETLIGHTS (TO BE SUPPLIED BY UTILITY OWNER). IF EXISTING LIGHT ARMS NEED TO BE REPLACED, CONTRACTOR TO OBTAIN NEW ARMS FROM UTILITY OWNER.

CONDUCTOR REMOVALS

FROM	TO	WIRE TYPE / SIZE	CIRCUIT LENGTH (LF)	TOTAL LENGTH (LF)
P41	P48	3Ø 2/0AAC SPACER CABLE	1,015	3,045
(E1.7)		1Ø 2/0AAC MESSENGER	1,015	1,015
P62	P68	3Ø 2/0AAC SPACER CABLE	981	2,943
(E1.9)		1Ø 2/0AAC MESSENGER	981	981
P63	P65	O.W. LIGHTING CIRCUIT	302	302

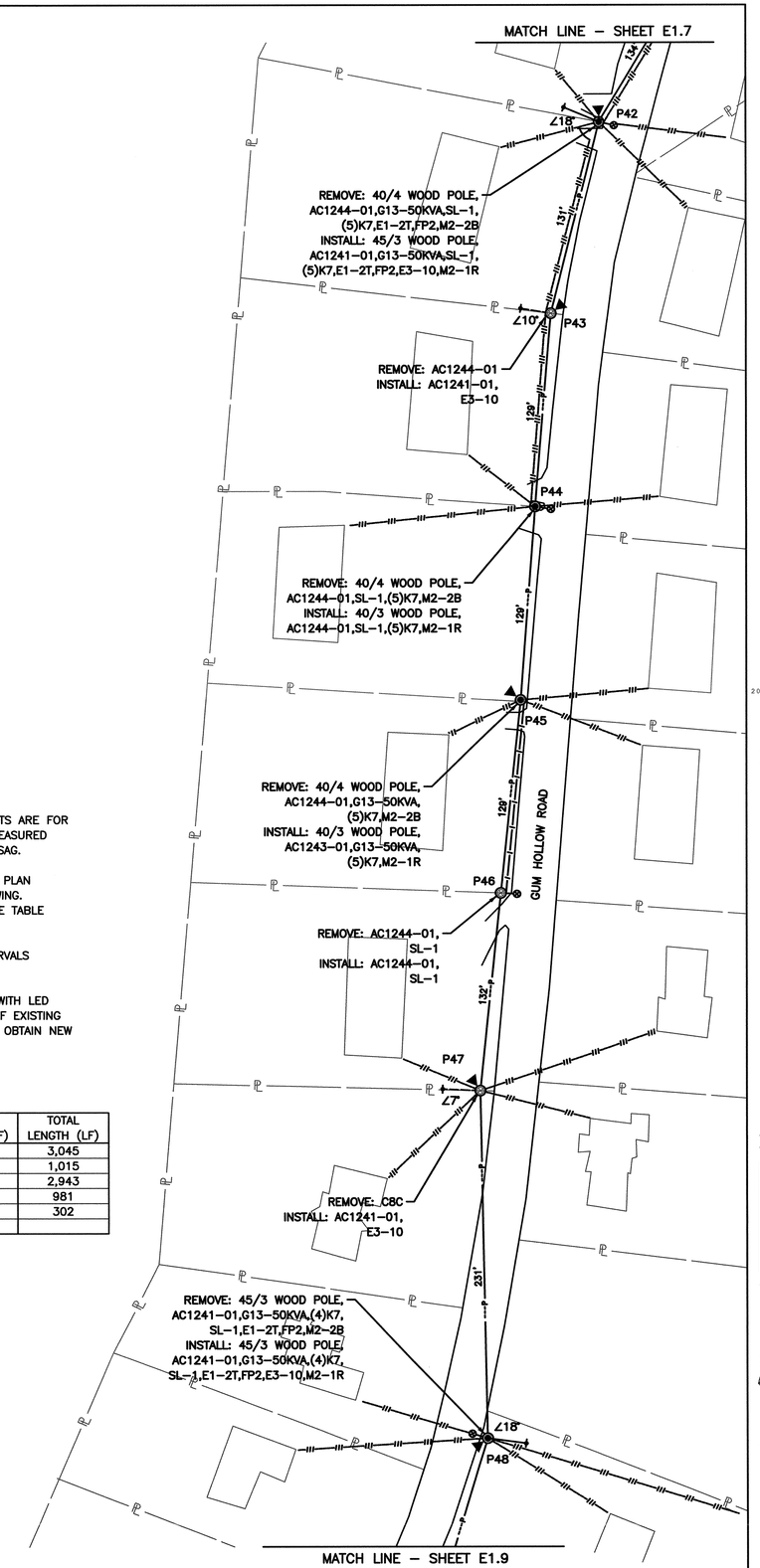

G S & P

Design Services For The Built Environment

Atlanta
Birmingham
Chipley
Cincinnati
Columbus
Dallas
Fort Lauderdale
Jackson
Jacksonville
Knoxville
Louisville
Memphis
Nashville
Richmond
Tampa

GRESHAM SMITH AND PARTNERS
2095 Lakeside Centre Way, Suite 120
Knoxville, Tennessee 37922
865.521.6777
WWW.GSPNET.COM

OVERHEAD 13kV HENDRIX DESIGN
GUM HOLLOW ROAD
OAK RIDGE, TENNESSEE

REVISION

No.	Date	Revision

PROPOSED ELECTRIC
(SHEET 7 OF 8)

E1.8

SCALE: 1"=50'
PROJECT: 41089.01
DATE: 2015

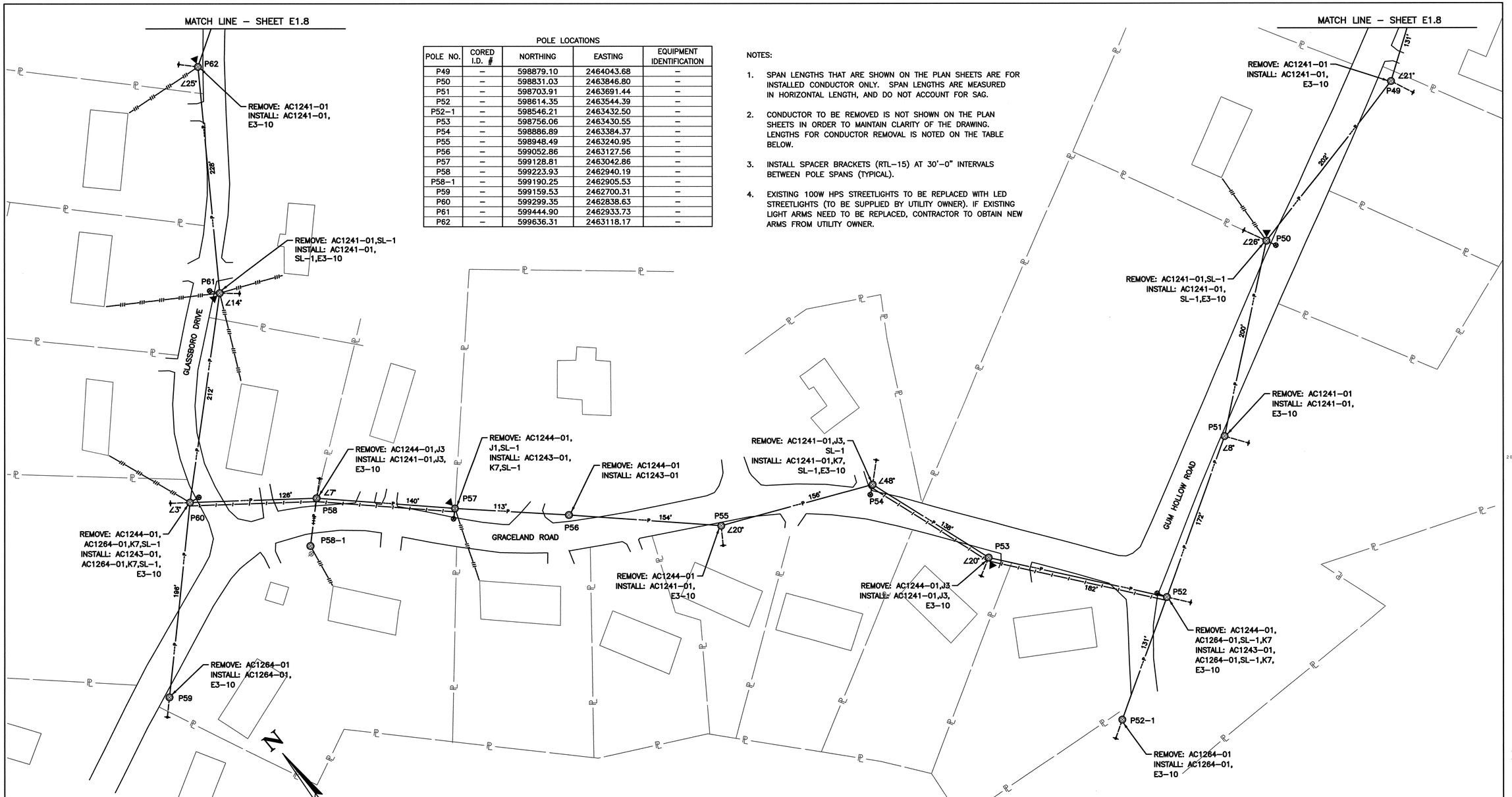

POLE LOCATIONS

POLE NO.	CORED I.D. #	NORTHING	EASTING	EQUIPMENT IDENTIFICATION
P49	–	598879.10	2464043.68	–
P50	–	598831.03	2463846.80	–
P51	–	598703.91	2463691.44	–
P52	–	598614.35	2463544.39	–
P52–1	–	598546.21	2463432.50	–
P53	–	598756.06	2463430.55	–
P54	–	598886.89	2463384.37	–
P55	–	598948.49	2463240.95	–
P56	–	599052.86	2463127.56	–
P57	–	599128.81	2463042.86	–
P58	–	599223.93	2462940.19	–
P58–1	–	599190.25	2462905.53	–
P59	–	599159.53	2462700.31	–
P60	–	599299.35	2462838.63	–
P61	–	599444.90	2462933.73	–
P62	–	599636.31	2463118.17	–

NOTES:

1. SPAN LENGTHS THAT ARE SHOWN ON THE PLAN SHEETS ARE FOR INSTALLED CONDUCTOR ONLY. SPAN LENGTHS ARE MEASURED IN HORIZONTAL LENGTH, AND DO NOT ACCOUNT FOR SAG.
2. CONDUCTOR TO BE REMOVED IS NOT SHOWN ON THE PLAN SHEETS IN ORDER TO MAINTAIN CLARITY OF THE DRAWING. LENGTHS FOR CONDUCTOR REMOVAL IS NOTED ON THE TABLE BELOW.
3. INSTALL SPACER BRACKETS (RTL–15) AT 30'–0" INTERVALS BETWEEN POLE SPANS (TYPICAL).
4. EXISTING 100W HPS STREETLIGHTS TO BE REPLACED WITH LED STREETLIGHTS (TO BE SUPPLIED BY UTILITY OWNER). IF EXISTING LIGHT ARMS NEED TO BE REPLACED, CONTRACTOR TO OBTAIN NEW ARMS FROM UTILITY OWNER.

CONDUCTOR INSTALLATIONS

FROM	TO	WIRE TYPE / SIZE	CIRCUIT LENGTH (LF)	TOTAL LENGTH (LF)
P48	P52–1	3Ø 336AAC SPACER CABLE	836	2,508
(E1.8)		1Ø 336AAC NEUTRAL	836	836
		052 AWA MESSENGER	836	836
P52	P60	3Ø 336AAC SPACER CABLE	1,009	3,027
		1Ø 336AAC NEUTRAL	1,009	1,009
		052 AWA MESSENGER	1,009	1,009
P59	P62	3Ø 336AAC SPACER CABLE	636	1,908
		1Ø 336AAC NEUTRAL	636	636
		052 AWA MESSENGER	636	636
P52	P54	#6 DUPLEX LIGHTING CIRCUIT	320	320
P57	P60	#6 DUPLEX LIGHTING CIRCUIT	266	266

CONDUCTOR REMOVALS

FROM	TO	WIRE TYPE / SIZE	CIRCUIT LENGTH (LF)	TOTAL LENGTH (LF)
P48	P52–1	3Ø 2/0AAC SPACER CABLE	836	2,508
(E1.8)		1Ø 2/0AAC MESSENGER	836	836
P52	P60	3Ø 2/0AAC SPACER CABLE	1,009	3,027
		1Ø 2/0AAC MESSENGER	1,009	1,009
P59	P62	3Ø 2/0AAC SPACER CABLE	636	1,908
		1Ø 2/0AAC MESSENGER	636	636
P48	P50	O.W. LIGHTING CIRCUIT	333	333
(E1.8)				
P52	P60	O.W. LIGHTING CIRCUIT	1,011	1,011

CONSTRUCTION NOTE:

NOTE #4 APPLIES TO ALL EXISTING STREETLIGHTS ALONG GOLDENGATE LANE AND GARNET LANE (NOT SHOWN ON PLAN SHEETS).

G S & P

Design Services For The Built Environment

Atlanta
Birmingham
Chipley
Cincinnati
Columbus
Dallas
Fort Lauderdale
Jackson
Jacksonville
Knoxville
Louisville
Memphis
Nashville
Richmond
Tampa

GRESHAM SMITH AND PARTNERS

2095 Lakeside Centre Way, Suite 120
Knoxville, Tennessee 37922
865.521.6777

WWW.GSPNET.COM

OVERHEAD 13kV HENDRIX DESIGN
GUM HOLLOW ROAD
OAK RIDGE, TENNESSEE

REVISION

No.	Date	Revision

JOHN B. WHARTON
REGISTERED ENGINEER
No. 18371
STATE OF TENNESSEE

2·17·16

PROPOSED ELECTRIC
(SHEET 8 OF 8)

E1.9

SCALE: 1"=50'
PROJECT: 41089.01
DATE: 2015

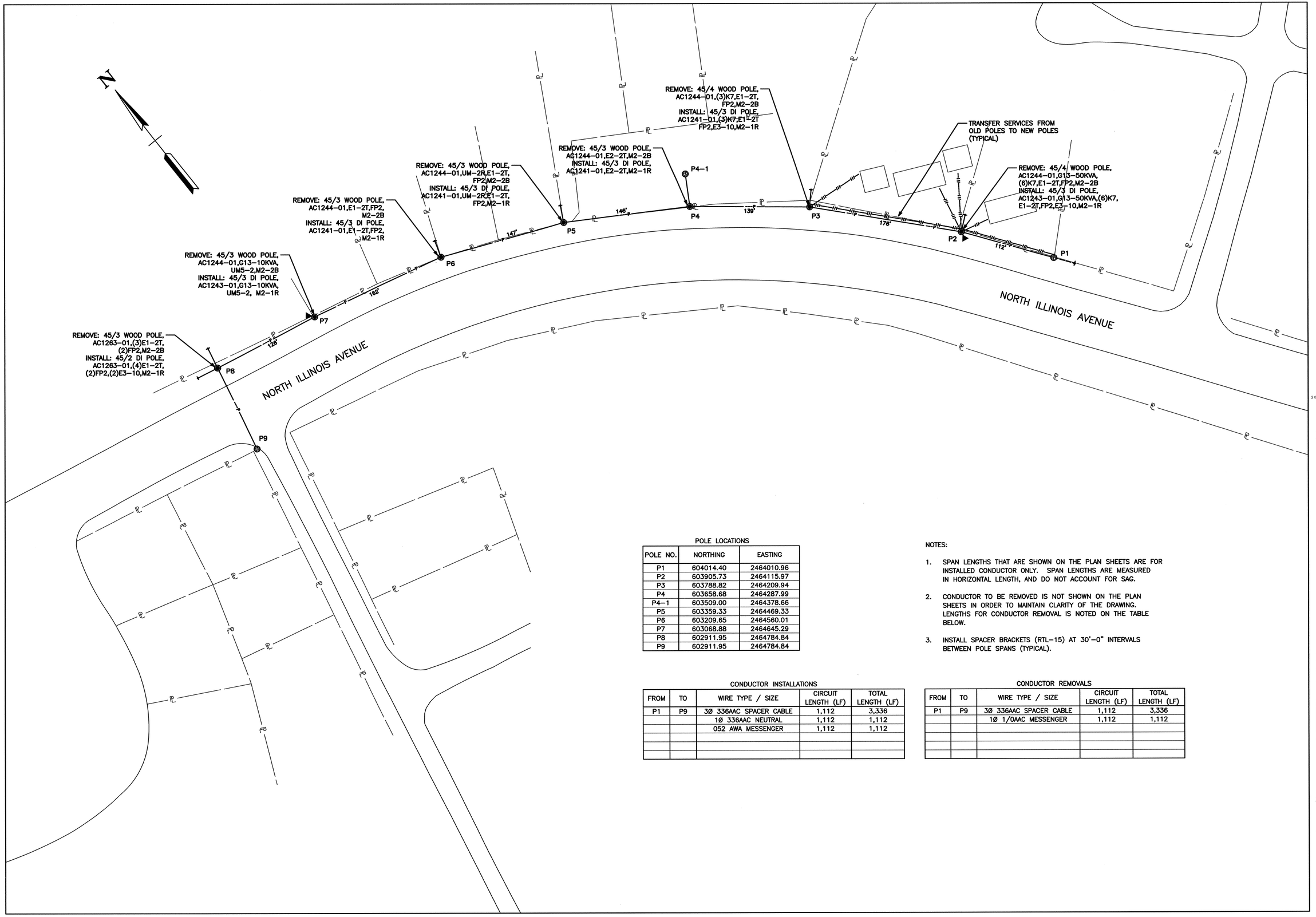

POLE LOCATIONS

POLE NO.	NORTHING	EASTING
P1	604014.40	2464010.96
P2	603905.73	2464115.97
P3	603788.82	2464209.94
P4	603658.68	2464287.99
P4-1	603509.00	2464378.66
P5	603359.33	2464469.33
P6	603209.65	2464560.01
P7	603068.88	2464645.29
P8	602911.95	2464784.84
P9	602911.95	2464784.84

NOTES:

1. SPAN LENGTHS THAT ARE SHOWN ON THE PLAN SHEETS ARE FOR INSTALLED CONDUCTOR ONLY. SPAN LENGTHS ARE MEASURED IN HORIZONTAL LENGTH, AND DO NOT ACCOUNT FOR SAG.
2. CONDUCTOR TO BE REMOVED IS NOT SHOWN ON THE PLAN SHEETS IN ORDER TO MAINTAIN CLARITY OF THE DRAWING. LENGTHS FOR CONDUCTOR REMOVAL IS NOTED ON THE TABLE BELOW.
3. INSTALL SPACER BRACKETS (RTL-15) AT 30'-0" INTERVALS BETWEEN POLE SPANS (TYPICAL).

CONDUCTOR INSTALLATIONS

FROM	TO	WIRE TYPE / SIZE	CIRCUIT LENGTH (LF)	TOTAL LENGTH (LF)
P1	P9	3Ø 336AAC SPACER CABLE	1,112	3,336
		1Ø 336AAC NEUTRAL	1,112	1,112
		052 AWA MESSENGER	1,112	1,112

CONDUCTOR REMOVALS

FROM	TO	WIRE TYPE / SIZE	CIRCUIT LENGTH (LF)	TOTAL LENGTH (LF)
P1	P9	3Ø 336AAC SPACER CABLE	1,112	3,336
		1Ø 1/0AAC MESSENGER	1,112	1,112

G S & P

Design Services For The Built Environment

Atlanta
Birmingham
Chipley
Cincinnati
Columbus
Dallas
Fort Lauderdale
Jackson
Jacksonville
Knoxville
Louisville
Memphis
Nashville
Richmond
Tampa

GRESHAM SMITH AND PARTNERS
2095 Lakeside Centre Way, Suite 120
Knoxville, Tennessee 37922
865.521.6777
WWW.GSPNET.COM

OVERHEAD 13kV HENDRIX INSTALLATION
NORTH ILLINOIS AVENUE
OAK RIDGE, TENNESSEE

REVISION		
No.	Date	Revision

JOHN B. WHARTON
REGISTERED ENGINEER
No. 19371
STATE OF TENNESSEE
2-17-16

PROPOSED ELECTRIC

E1.10

SCALE: 1"=50'
PROJECT: 41089.01
DATE: 2015

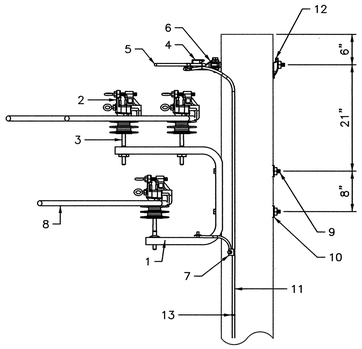

NOTES:

1. ALL DETAIL AND MATERIAL INFORMATION PROVIDED BY HENDRIX.

ID.	QTY.	DESCRIPTION	OWNER SUPPLIED
1	1	ANGLE BRACKET, HENDRIX TYPE BA3–15 (15kV)	X
2	3	INSULATOR, PIN TYPE, HENDRIX HP1–15VTP	X
3	3	INSULATOR PIN, HENDRIX SSP–2	X
4	1	ANGLE CLAMP, HENDRIX CMA–1	X
5		MESSENGER CABLE, HENDRIX (TYPE & SIZE AS REQ'D)	X
6	1	EYEBOLT, 5/8" x REQUIRED LENGTH	
7		CONNECTOR (TYPE & SIZE AS REQ'D)	
8		HENDRIX AERIAL CABLE (TYPE & SIZE AS REQ'D)	X
9	2	MACHINE BOLT, 5/8" x REQUIRED LENGTH	
10	2	SQUARE WASHER, 2–1/4"x2–1/4"x3/16"	
11		GROUND WIRE, SD COPPER, SOLID #6AWG (AS REQ'D)	
12	1	GUY HOOK	
13		GROUND WIRE STAPLE (AS REQUIRED)	

THREE PHASE HENDRIX ANGLE CONSTRUCTION
USING BA3-15 (7°-60°)

DATE: 2015

DETAIL NUMBER

AC1241-01

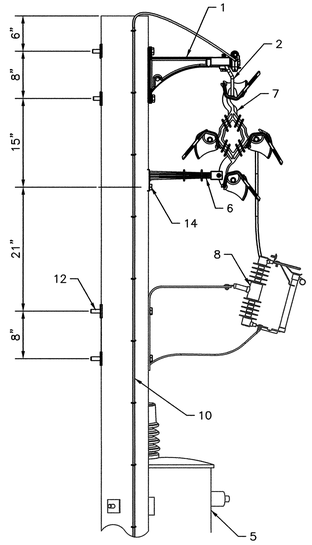

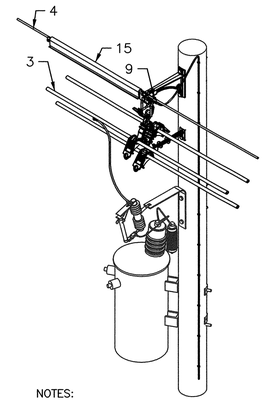

NOTES:

1. ALL DETAIL AND MATERIAL INFORMATION PROVIDED BY HENDRIX.

ID.	QTY.	DESCRIPTION	OWNER SUPPLIED
1	1	MESSENGER BRACKET, HENDRIX TYPE BM–14	X
2	1	STIRRUP, HENDRIX TYPE TS–1	X
3		HENDRIX AERIAL CABLE (TYPE & SIZE AS REQ'D)	X
4		MESSENGER CABLE, HENDRIX (TYPE & SIZE AS REQ'D)	X
5		TRANSFORMER, SINGLE PHASE (BY OWNER)	
6	1	ANTI–SWAY BRACKET, HENDRIX TYPE BAS–14F	X
7	1	SPACER, HENDRIX TYPE RTL–15	X
8		FUSED CUTOUT (BY OWNER, SEE DETAIL G13–KVA)	
9		CONNECTOR (TYPE & SIZE AS REQ'D)	
10		GROUND WIRE, SD COPPER, SOLID, #6 AWG (AS REQ'D)	
11		GROUND WIRE STAPLE (AS REQUIRED)	
12	6	MACHINE BOLT, 5/8" x REQUIRED LENGTH	
13	6	SQUARE WASHER, 2–1/4"x2–1/4"x3/16"	
14	1	LAG SCREW, 1/2"x4"	
15		HENDRIX LINE–DUC (AS REQUIRED)	X

THREE PHASE HENDRIX TANGENT CONSTRUCTION
TRANSFORMER TAP POLE

DATE: 2015

DETAIL NUMBER

AC1243-01

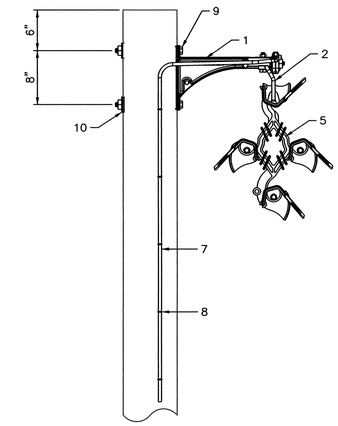

NOTES:

1. ALL DETAIL AND MATERIAL INFORMATION PROVIDED BY HENDRIX.

ID.	QTY.	DESCRIPTION	OWNER SUPPLIED
1	1	MESSENGER BRACKET, HENDRIX TYPE BM–14	X
2	1	STIRRUP, HENDRIX TYPE TS–1	X
3		HENDRIX AERIAL CABLE (TYPE & SIZE AS REQ'D)	X
4		MESSENGER CABLE, HENDRIX (TYPE & SIZE AS REQ'D)	X
5	1	SPACER, HENDRIX TYPE RTL–15	X
6	1	CONNECTOR (TYPE & SIZE AS REQ'D)	
7		GROUND WIRE, SD COPPER, SOLID, #6 AWG (AS REQ'D)	
8		GROUND WIRE STAPLE (AS REQUIRED)	
9	2	MACHINE BOLT, 5/8" x REQUIRED LENGTH	
10	2	SQUARE WASHER, 2–1/4"x2–1/4"x3/16"	

THREE PHASE HENDRIX TANGENT CONSTRUCTION

DATE: 2015

DETAIL NUMBER

AC1244-01

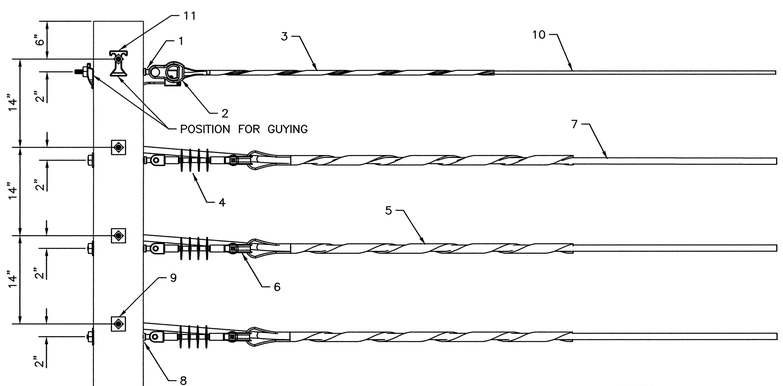

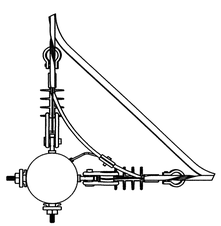

NOTES:

1. ALL DETAIL AND MATERIAL INFORMATION PROVIDED BY HENDRIX.

ID.	QTY.	DESCRIPTION	OWNER SUPPLIED
1	2	EYEBOLT, 3/4" x REQUIRED LENGTH	
2	2	THIMBLE CLEVIS, HENDRIX TYPE HDTC	X
3	2	PRESHAPED MESSENGER GRIP	X
4	6	INSULATOR, POLYMER DEAD–END, 15kV	
5	6	PRESHAPED CONDUCTOR GRIP, COATED	X
6	6	THIMBLE CLEVIS, HENDRIX TYPE TC	X
7		HENDRIX AERIAL CABLE (TYPE & SIZE AS REQ'D)	X
8	6	EYEBOLT, 5/8" x REQUIRED LENGTH	
9	6	SQUARE WASHER, 2–1/4"x2–1/4"x3/16"	
10		MESSENGER CABLE, HENDRIX (TYPE & SIZE AS REQ'D)	X
11	2	GUY HOOK	
12		GROUND WIRE STAPLE (AS REQUIRED)	
13		GROUND WIRE, SD COPPER, SOLID #6AWG (AS REQ'D)	
14		CONNECTOR (TYPE & SIZE AS REQ'D)	

THREE PHASE HENDRIX CONSTRUCTION
VERTICAL DOUBLE DEADEND

DATE: 2015

DETAIL NUMBER

AC1263-01

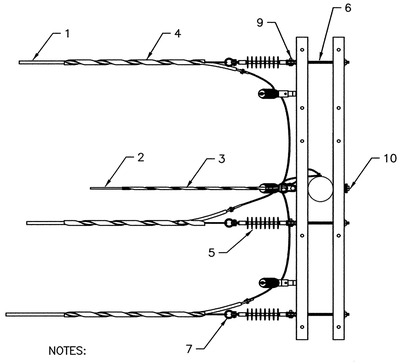

NOTES:

1. ALL DETAIL AND MATERIAL INFORMATION PROVIDED BY HENDRIX.

ID.	QTY.	DESCRIPTION	OWNER SUPPLIED
1		HENDRIX AERIAL CABLE (TYPE & SIZE AS REQ'D)	X
2		MESSENGER CABLE, HENDRIX (TYPE & SIZE AS REQ'D)	X
3	1	PRESHAPED MESSENGER GRIP	X
4	3	PRESHAPED CONDUCTOR GRIP, COATED	X
5	3	INSULATOR, POLYMER DEAD–END, 15kV	
6	4	DOUBLE ARMING BOLT, 5/8" x REQUIRED LENGTH	
7	3	THIMBLE CLEVIS, HENDRIX TYPE TC	X
8		CONNECTOR (TYPE & SIZE AS REQ'D)	
9	4	EYENUT, 5/8" x REQUIRED LENGTH	
10	1	GUY HOOK	
11		GROUND WIRE STAPLE (AS REQUIRED)	
12		GROUND WIRE, SD COPPER, SOLID #6AWG (AS REQ'D)	
13	1	THIMBLE CLEVIS, HENDRIX TYPE HDTC	X
14	2	CROSSARM, 8'–0"	
15	4	BRACE, FLAT STEEL	
16	2	LAG SCREW, 1/2"x4"	
17	4	CARRIAGE BOLT, 3/8"x4–1/2"	
18	12	SQUARE WASHER, 2–1/4"x2–1/4"x3/16"	

THREE PHASE HENDRIX CONSTRUCTION
CROSSARM DEADEND

DATE: 2015

DETAIL NUMBER

AC1264-01

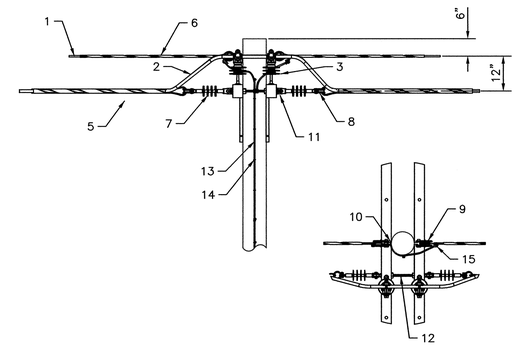

NOTES:

1. ALL DETAIL AND MATERIAL INFORMATION PROVIDED BY HENDRIX.
2. ONLY ONE PHASE OF THREE–PHASE CIRCUIT SHOWN FOR CLARITY.

ID.	QTY.	DESCRIPTION	OWNER SUPPLIED
1		MESSENGER CABLE, HENDRIX (TYPE & SIZE AS REQ'D)	X
2		HENDRIX AERIAL CABLE (TYPE & SIZE AS REQ'D)	X
3	6	INSULATOR, PIN TYPE, HENDRIX HP1–15VTP	X
4	6	INSULATOR PIN, LONG SHANK, HENDRIX LSP–1	X
5	6	PRESHAPED CONDUCTOR GRIP, COATED	X
6	2	PRESHAPED MESSENGER GRIP	X
7	6	INSULATOR, POLYMER DEAD–END, 15kV	
8	6	THIMBLE CLEVIS, HENDRIX TYPE TC	X
9	2	THIMBLE CLEVIS, HENDRIX TYPE HDTC	X
10	1	EYEBOLT, 5/8" x REQUIRED LENGTH	
11	7	EYENUT, 5/8" x REQUIRED LENGTH	
12	3	DOUBLE ARMING BOLT, 5/8" x REQUIRED LENGTH	
13		GROUND WIRE, SD COPPER, SOLID #6AWG (AS REQ'D)	
14		GROUND WIRE STAPLE (AS REQUIRED)	
15		CONNECTOR (TYPE & SIZE AS REQ'D)	

THREE PHASE HENDRIX CONSTRUCTION
CROSSARM DOUBLE DEADEND

DATE: 2015

DETAIL NUMBER

AC1265-01

G S & P ®

Design Services For The Built Environment

Atlanta
Birmingham
Chipley
Cincinnati
Columbus
Dallas
Fort Lauderdale
Jackson
Jacksonville
Knoxville
Louisville
Memphis
Nashville
Richmond
Tampa

GRESHAM SMITH AND PARTNERS
2095 Lakeside Centre Way, Suite 120
Knoxville, Tennessee 37922
865.521.6777
WWW.GSPNET.COM

OVERHEAD 13kV HENDRIX DESIGN
GUM HOLLOW ROAD AND NORTH ILLINOIS AVENUE
OAK RIDGE, TENNESSEE

REVISION		
No.	Date	Revision

JOHN B. WHARTON
REGISTERED ENGINEER
No. 18371
STATE OF TENNESSEE
2-17-16

CONSTRUCTION DETAILS
(SHEET 1 OF 4)

E1.11

SCALE: NONE
PROJECT: 41089.01
DATE: 2015

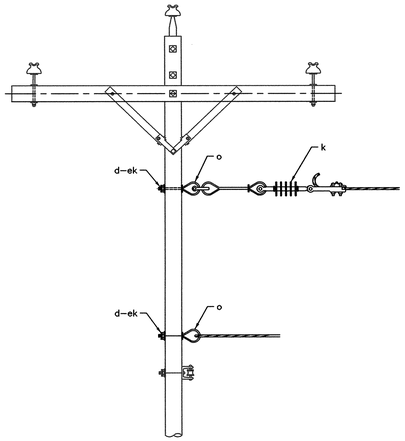

ID.	QTY.	DESCRIPTION
d	4	SQUARE CURVED WASHER, 2–1/4"x2–1/4"x3/16"
ek	2	LOCKNUT
k	1	SUSPENSION INSULATOR, POLYMER
o	2	EYEBOLT, 5/8" x 12"

VERTICAL CONSTRUCTION
SINGLE-PHASE TAP OFF OF THREE-PHASE CIRCUIT
SINGLE DEADEND

DATE: 2015

DETAIL NUMBER

A5-1

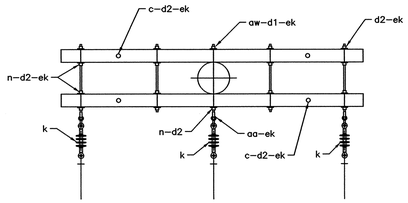

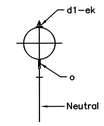

SECTION X–X

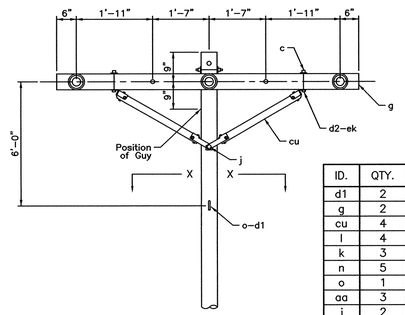

ID.	QTY.	DESCRIPTION
d1	2	SQUARE CURVED WASHER, 2–1/4"x2–1/4"x3/16"
g	2	WOODEN CROSSARM, 8'–0"
cu	4	CROSSARM BRACE, 18" METAL
l	4	CARRIAGE BOLT, 1/2" x 7"
k	3	SUSPENSION INSULATOR, POLYMER
n	5	DOUBLE ARMING BOLT, 5/8" x 24"
o	1	EYEBOLT, 5/8" x 12"
aa	3	EYE NUT, 5/8"
j	2	LAG SCREW, 1/2" x 4"
ek	22	LOCKNUT
d2	20	SQUARE FLAT WASHER, 2–1/4"x2–1/4"x3/16"
c	4	MACHINE BOLT, 1/2" x REQUIRED LENGTH
aw	1	MACHINE BOLT, 5/8" x REQUIRED LENGTH

CROSSARM CONSTRUCTION
THREE-PHASE LARGE CONDUCTOR
SINGLE DEADEND

DATE: 2015

DETAIL NUMBER

C7-CL

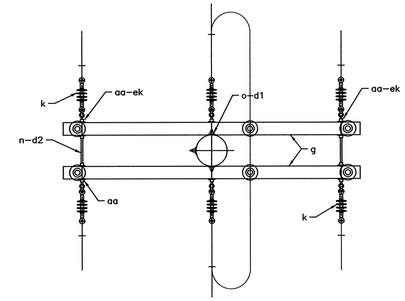

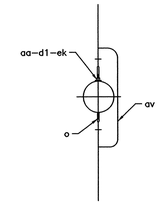

SECTION X–X

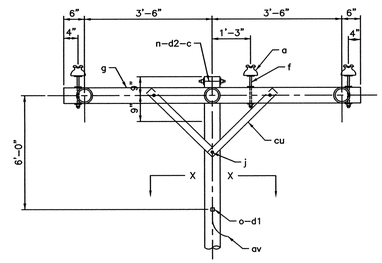

ID.	QTY.	DESCRIPTION
a	6	INSULATOR, PIN TYPE
f	6	PIN, CROSSARM
d1	2	SQUARE CURVED WASHER, 2–1/4"x2–1/4"x3/16"
g	2	WOODEN CROSSARM, 8'–0"
cu	2	CROSSARM BRACE, 18" METAL
k	6	SUSPENSION INSULATOR, POLYMER
n	3	DOUBLE ARMING BOLT, 5/8" x 24"
o	1	EYEBOLT, 5/8" x 12"
aa	7	EYE NUT, 5/8"
j	2	LAG SCREW, 1/2" x 4"
ek	22	LOCKNUT
d2	20	SQUARE FLAT WASHER, 2–1/4"x2–1/4"x3/16"
c	1	MACHINE BOLT, 5/8" x REQUIRED LENGTH

CROSSARM CONSTRUCTION
THREE-PHASE DOUBLE DEADEND

DATE: 2015

DETAIL NUMBER

C8C

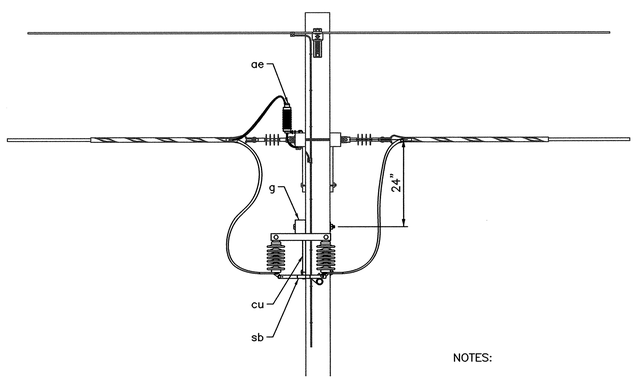

NOTES:

1. INSTALL SWTICHES PER MANUFACTURER RECOMMENDATIONS.
2. ONLY ONE PHASE OF THREE–PHASE CIRCUIT SHOWN FOR CLARITY.

ID.	QTY.	DESCRIPTION
cu	1	CROSSARM BRACE, 18" METAL
d	22	SQUARE FLAT WASHER, 2–1/4"x2–1/4"x3/16"
ek	14	LOCKNUT
g	1	WOODEN CROSSARM, 8'–0"
j	1	LAG SCREW, 1/2" x 4"
l	2	CARRIAGE BOLT, 1/2" x 7"
sb	3	DISCONNECT SWITCH, 600A
ae	3	ARRESTER, 10kV
aw	9	MACHINE BOLT, 5/8" x REQUIRED LENGTH

DOUBLE DEAD-END SPACER CABLE CONSTRUCTION
WITH DISCONNECT SWITCHES

DATE: 7/24/12

DETAIL NUMBER

M3-3CS

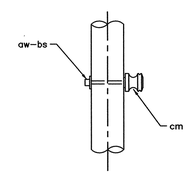

J1

ID.	QTY.	DESCRIPTION
aw	1	WASHER, SQUARE CURVED, 2–1/4"x2–1/4"x3/16"
bs	1	BOLT, SINGLE UPSET (LENGTH AS REQUIRED)
cm	1	INSULATOR, 3" SPOOL

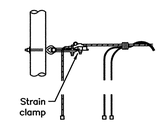

K6

ID.	QTY.	DESCRIPTION
aw	1	WASHER, SQUARE CURVED, 2–1/4"x2–1/4"x3/16"
bn	1	SECONDARY DEADEND (SIZE AS REQUIRED)
c	1	MACHINE BOLT, 5/8" x LENGTH AS REQUIRED

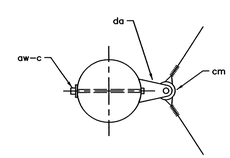

J3

ID.	QTY.	DESCRIPTION
aw	1	WASHER, SQUARE CURVED, 2–1/4"x2–1/4"x3/16"
c	1	MACHINE BOLT, 5/8" x LENGTH AS REQUIRED
cm	1	INSULATOR, 3" SPOOL
da	1	CLEVIS, SECONDARY

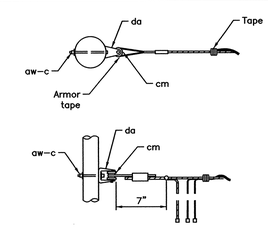

K7

ID.	QTY.	DESCRIPTION
aw	1	WASHER, SQUARE CURVED, 2–1/4"x2–1/4"x3/16"
c	1	MACHINE BOLT, 5/8" x LENGTH AS REQUIRED
cm	1	INSULATOR, 3" SPOOL
da	1	CLEVIS, SECONDARY

SECONDARY ASSEMBLIES

DATE: 2015

DETAIL NUMBER

J1/J3

SERVICE ASSEMBLIES
ALUMINUM WEATHERPROOF
POLE ATTACHMENTS

DATE: 2015

DETAIL NUMBER

K6/K7

G S & P

Design Services For The Built Environment

Atlanta
Birmingham
Chipley
Cincinnati
Columbus
Dallas
Fort Lauderdale
Jackson
Jacksonville
Knoxville
Louisville
Memphis
Nashville
Richmond
Tampa

GRESHAM SMITH AND PARTNERS

2095 Lakeside Centre Way, Suite 120
Knoxville, Tennessee 37922
865.521.6777

WWW.GSPNET.COM

OVERHEAD 13kV HENDRIX DESIGN
GUM HOLLOW ROAD AND
NORTH ILLINOIS AVENUE
OAK RIDGE, TENNESSEE

REVISION		
No.	Date	Revision

JOHN B. WHARTON
REGISTERED ENGINEER
No. 102171
COMMERCE
STATE OF TENNESSEE
2-17-16

CONSTRUCTION DETAILS
(SHEET 2 OF 4)

E1.12

SCALE: NONE
PROJECT: 41089.01
DATE: 2015

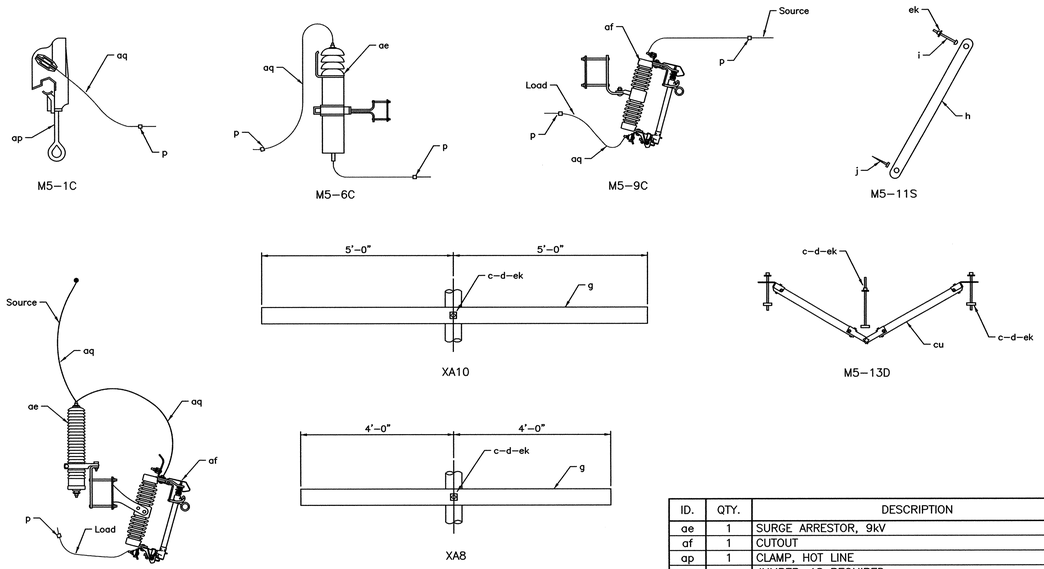

ID.	QTY.	DESCRIPTION
ae	1	SURGE ARRESTOR, 9kV
af	1	CUTOUT
ap	1	CLAMP, HOT LINE
aq	–	JUMPER, AS REQUIRED
c	1	MACHINE BOLT, 5/8" x LENGTH AS REQUIRED
cu	1	BRACE, WOOD, SIZE AS REQUIRED
d	1	WASHER, SQUARE, 2–1/4"x2–1/4"x3/16"
ek	1	LOCKNUT
g	1	WOODEN CROSSARM, SIZE AS REQUIRED
j	1	LAG SCREW, 1/2" x 4"
p	–	CONNECTORS, AS REQUIRED

MISCELLANEOUS
PRIMARY ASSEMBLIES

DATE: 2015

DETAIL NUMBER

M5B

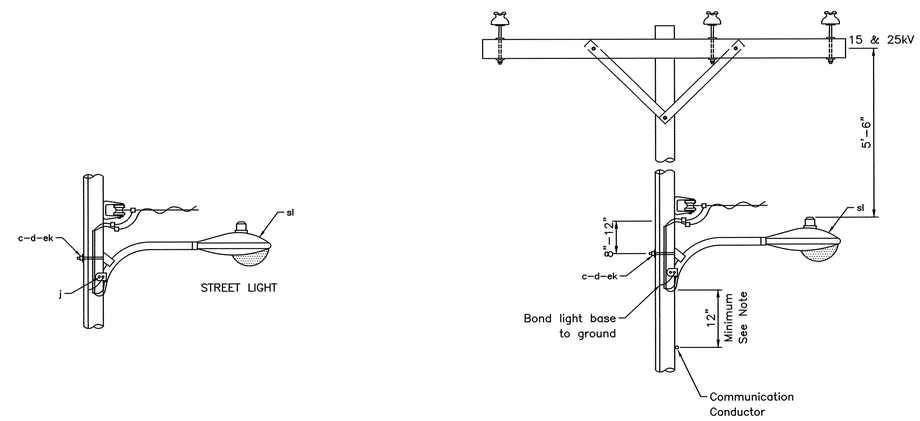

NOTES:

1. RULE 238 D, N.E.S.C. 1993

ID.	QTY.	DESCRIPTION
c	–	MACHINE BOLT, 5/8" x LENGTH AS REQUIRED
d	1	WASHER, CURVED SQUARE 2–1/4"x2–1/4"x3/16"
ek	–	LOCKNUT
j	–	LAG SCREW, 1/2" x 4"
sl	–	LIGHT, SIZE AS REQUIRED

GUIDE DRAWING
100, 250 AND 400 WATT SECURITY / STREET LIGHT

DATE: 2015

DETAIL NUMBER

SL-1

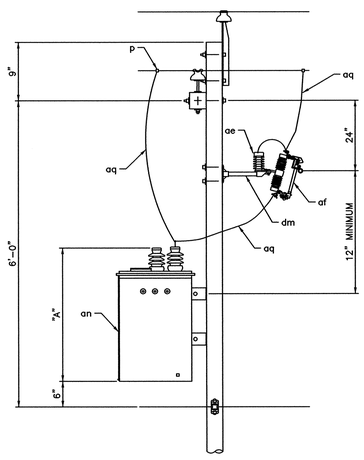

NOTES:

1. BOND TRANSFORMER NEUTRAL TO SYSTEM GROUND.
2. CUTOUT AND ARRESTER MAY BE MOUNTED ON CROSSARM IF THERE IS SPACE AVAILABLE.
3. CUTOUT SHOULD BE MOUNTED SO THAT IT CAN BE EASILY OPERATED FROM THE GROUND AND WILL NOT DISCHARGE ON OTHER EQUIPMENT.
4. MAINTAIN MINIMUM OF 24'–0" FROM BOTTOM OF TRANSFORMER TO GRADE.
4. REFER TO CONNECTION DETAILS FOR TRANSFORMER WIRING SCHEMATICS.

TYPICAL DIMENSIONS		
	CONVENTIONAL	CSP
SIZE	OVERALL HEIGHT "A"	OVERALL HEIGHT "A"
10kVA	32"	36"
15kVA	35"	42"
25kVA	38"	44"
37.5kVA	40"	46"
50kVA	44"	46"
75kVA	51"	–

ID.	QTY.	DESCRIPTION
ae	1	SURGE ARRESTER, 9kV
af	1	CUTOUT
an	1	SINGLE PHASE TRANSFORMER, SIZE AS REQUIRED
aq	–	JUMPER, AS REQUIRED
c	4	MACHINE BOLT, 5/8" x LENGTH AS REQUIRED
d	4	WASHER, SQUARE, 2–1/4"x2–1/4"x3/16"
dm	1	BRACKET, SINGLE PHASE C/O & ARRESTER
ek	4	LOCKNUT
p	–	CONNECTORS, AS REQUIRED

SINGLE PHASE POLE MOUNTED
TRANSFORMER

DATE: 2015

DETAIL NUMBER

G13-KVA

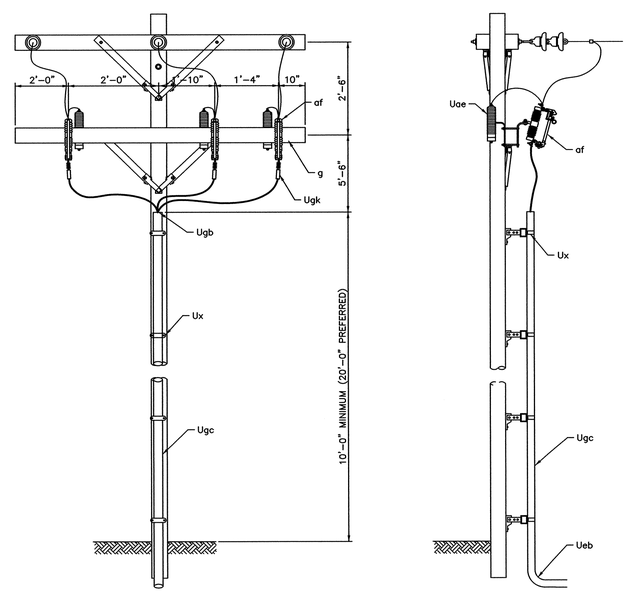

NOTES:

1. NO BENDS PERMITTED WITHIN 6" OF CABLE TERMINAL BASE.
2. ALLOW MINIMUM CABLE SLACK OF 24" AT BOTTOM OF RISER.
3. TOTAL LEAD LENGTH FOR ARRESTER MUST BE LESS THAN THREE FEET.
4. INSTALL PHASE MARKERS.
5. STAND–OFF BRACKETS TO BE INSTALLED ON ALL PRIMARY RISERS.
6. USE FLAT WASHERS ON FLAT SURFACES AND CURVED WASHERS ON CURVED SURFACES.

ID.	QTY.	DESCRIPTION
ae	3	SURGE ARRESTER, 9kV
af	3	CUTOUT
aq	–	JUMPER, AS REQUIRED
c	9	MACHINE BOLT, 5/8" x LENGTH AS REQUIRED
cu	2	CROSSARM BRACE, 18" METAL
d	14	WASHER, SQUARE, 2–1/4"x2–1/4"x3/16"
ek	9	LOCKNUT
g	1	WOODEN CROSSARM, 8'–0"
j	1	LAG SCREW, 1/2" x 4"
l	2	CARRIAGE BOLT, 1/2"x7"
Ueb	1	CONDUIT ELBOW, SIZE AS REQUIRED
Ugb	1	CONDUIT SEAL, SIZE AS REQUIRED
Ugc	–	CONDUIT, SIZE AS REQUIRED
Ugk	3	TERMINATOR
Ux	–	CONDUIT STRAP, SIZE AS REQUIRED
	–	STAND–OFF BRACKET, SIZE AS REQUIRED
	–	PHASE MARKER

THREE PHASE PRIMARY
RISER POLE

DATE: 2015

DETAIL NUMBER

UM2-5R

G S & P

Design Services
For The Built
Environment

Atlanta
Birmingham
Chipley
Cincinnati
Columbus
Dallas
Fort Lauderdale
Jackson
Jacksonville
Knoxville
Louisville
Memphis
Nashville
Richmond
Tampa

GRESHAM
SMITH AND
PARTNERS

2095 Lakeside Centre Way, Suite 120
Knoxville, Tennessee 37922
865.521.6777

WWW.GSPNET.COM

OVERHEAD 13kV HENDRIX DESIGN
GUM HOLLOW ROAD AND
NORTH ILLINOIS AVENUE
OAK RIDGE, TENNESSEE

REVISION		
No.	Date	Revision

CONSTRUCTION DETAILS
(SHEET 3 OF 4)

E1.13

SCALE: NONE
PROJECT: 41089.01
DATE: 2015

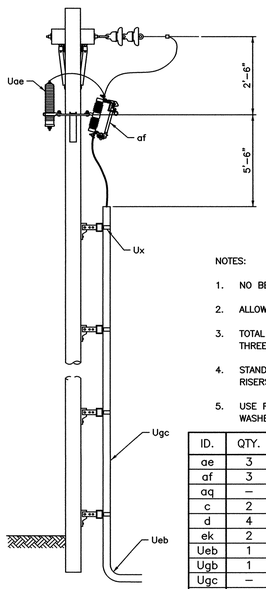

NOTES:

1. NO BENDS PERMITTED WITHIN 6" OF CABLE TERMINAL BASE.
2. ALLOW MINIMUM CABLE SLACK OF 24" AT BOTTOM OF RISER.
3. TOTAL LEAD LENGTH FOR ARRESTER MUST BE LESS THAN THREE FEET.
4. STAND-OFF BRACKETS TO BE INSTALLED ON ALL PRIMARY RISERS.
5. USE FLAT WASHERS ON FLAT SURFACES AND CURVED WASHERS ON CURVED SURFACES.

ID.	QTY.	DESCRIPTION
ae	3	SURGE ARRESTER, 9kV
af	3	CUTOUT
aq	–	JUMPER, AS REQUIRED
c	2	MACHINE BOLT, 5/8" x LENGTH AS REQUIRED
d	4	WASHER, SQUARE, 2-1/4"x2-1/4"x3/16"
ek	2	LOCKNUT
Ueb	1	CONDUIT ELBOW, SIZE AS REQUIRED
Ugb	1	CONDUIT SEAL, SIZE AS REQUIRED
Ugc	–	CONDUIT, SIZE AS REQUIRED
Ugk	3	TERMINATOR
Ux	–	CONDUIT STRAP, SIZE AS REQUIRED
	–	STAND-OFF BRACKET, SIZE AS REQUIRED

SINGLE PHASE PRIMARY RISER POLE

DATE: 2015

DETAIL NUMBER

UM-2R

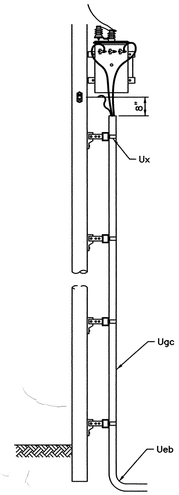

ID.	QTY.	DESCRIPTION
c	8	MACHINE BOLT, 5/8" x LENGTH AS REQUIRED
Ueb	1	CONDUIT ELBOW, 3", SCHEDULE 40 PVC
Ugb	1	CONDUIT SEAL, SIZE AS REQUIRED
Ugc	–	CONDUIT, 3", SCH. 40 PVC, LENGTH AS REQ.
Ux	–	CONDUIT STRAP, SIZE AS REQUIRED
	–	STAND-OFF BRACKET, SIZE AS REQUIRED
	–	CABLE, SECONDARY TRIPLEX, LENGTH AS REQ.

SINGLE PHASE SECONDARY RISER POLE

DATE: 2015

DETAIL NUMBER

UM5-2

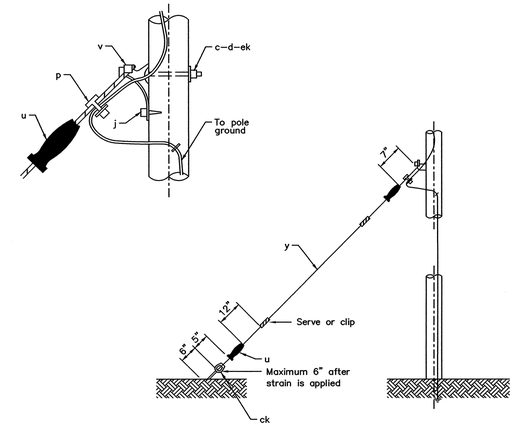

ID.	QTY.	DESCRIPTION
c	1	MACHINE BOLT, 5/8" x REQUIRED LENGTH
ck	1	GUY BOND CLAMPS
d	1	SQUARE CURVED WASHER, 2-1/4"x2-1/4"x3/16"
ek	1	LOCKNUT
j	1	LAG SCREW, 1/2" x 4"
u	2	STRAND VISE, 3/8"
v	1	GUY ATTACHMENT
y	1	3/8" GUY STRAND, LENGTH AS REQUIRED

SINGLE DOWN GUY THROUGH-BOLT TYPE

DATE: 2015

DETAIL NUMBER

E1-2T

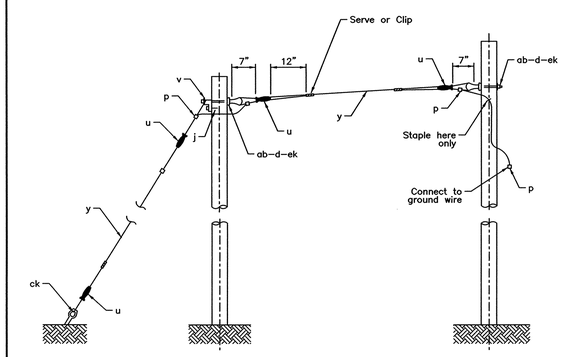

NOTES:

1. ENSURE THAT GUY POLE BEING INSTALLED IS OF SUFFICIENT CLASS TO WITHSTAND REQUIRED TENSION FROM MAIN LINE FACILITIES.
2. MAINTAIN A MINIMUM OF 20'-0" CLEARANCE ABOVE ROADWAY FOR OVERHEAD GUY WIRE.

ID.	QTY.	DESCRIPTION
ab	2	BOLT, THIMBLE EYE, 5/8" x REQUIRED LENGTH
ck	1	GUY BOND CLAMPS
d	2	SQUARE CURVED WASHER, 2-1/4"x2-1/4"x3/16"
ek	2	LOCKNUT
j	1	LAG SCREW, 1/2" x 4"
p	–	CONNECTORS, AS REQUIRED
u	4	STRAND VISE, 3/8"
v	1	GUY ATTACHMENT
y	2	3/8" GUY STRAND, LENGTH AS REQUIRED

SINGLE OVERHEAD GUY THROUGH-BOLT TYPE

DATE: 2015

DETAIL NUMBER

E2-2T

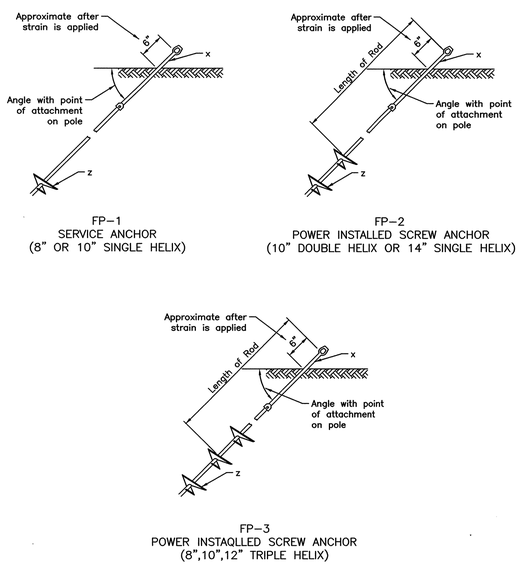

FP-1
SERVICE ANCHOR
(8" OR 10" SINGLE HELIX)

FP-2
POWER INSTALLED SCREW ANCHOR
(10" DOUBLE HELIX OR 14" SINGLE HELIX)

FP-3
POWER INSTAQLLED SCREW ANCHOR
(8",10",12" TRIPLE HELIX)

ID.	QTY.	DESCRIPTION
x	1	ROD, ANCHOR, WITH TWINEYE (SIZE AS REQUIRED)
z	1	POWER INSTALLED HELIX ANCHOR (SIZE AS REQUIRED)

POWER INSTALLED SCREW ANCHORS

DATE: 2015

DETAIL NUMBER

FP-1,2,3

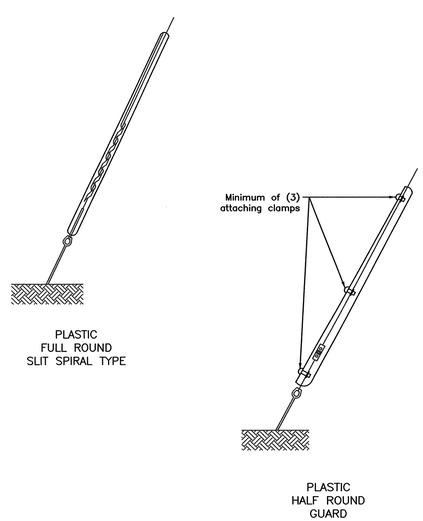

PLASTIC
FULL ROUND
SLIT SPIRAL TYPE

PLASTIC
HALF ROUND
GUARD

NOTES:

1. GUY MARKERS SHALL BE NO LESS THAN 8'-0" IN LENGTH.
2. MARKERS FOR SIDEWALK GUYS SHOULD BE FULL ROUND TYPE OR INSTALLED SO THAT MOUNTING CLAMPS WILL NOT COME IN CONTACT WITH PEDESTRIANS.

GUY MARKERS

DATE: 2015

DETAIL NUMBER

E3-10

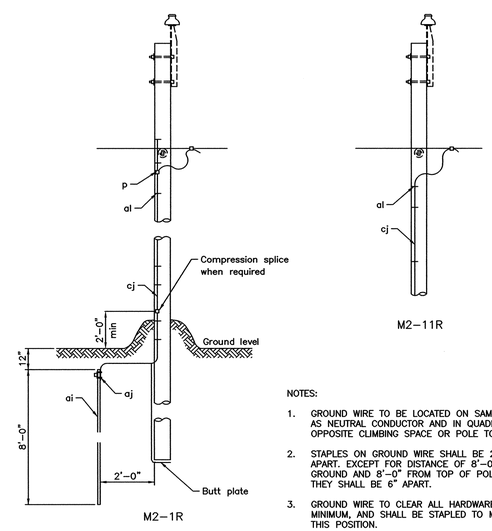

M2-1R

M2-11R

NOTES:

1. GROUND WIRE TO BE LOCATED ON SAME SIDE AS NEUTRAL CONDUCTOR AND IN QUADRANT OPPOSITE CLIMBING SPACE OR POLE TOP PIN.
2. STAPLES ON GROUND WIRE SHALL BE 2'-0" APART. EXCEPT FOR DISTANCE OF 8'-0" ABOVE GROUND AND 8'-0" FROM TOP OF POLE, WHERE THEY SHALL BE 6" APART.
3. GROUND WIRE TO CLEAR ALL HARDWARE BY 2" MINIMUM, AND SHALL BE STAPLED TO MAINTAIN THIS POSITION.

ID.	QTY.	DESCRIPTION
ai	1	GROUND ROD, 5/8" x 8'-0"
aj	1	GROUND ROD CLAMP
al	–	STAPLES, AS REQUIRED
cj	–	WIRE, #6 SD CU, LENGTH AS REQUIRED
p	–	CONNECTORS, AS REQUIRED

GROUNDING ASSEMBLY GROUND ROD TYPE

DATE: 2015

DETAIL NUMBER

M2-1R/11R

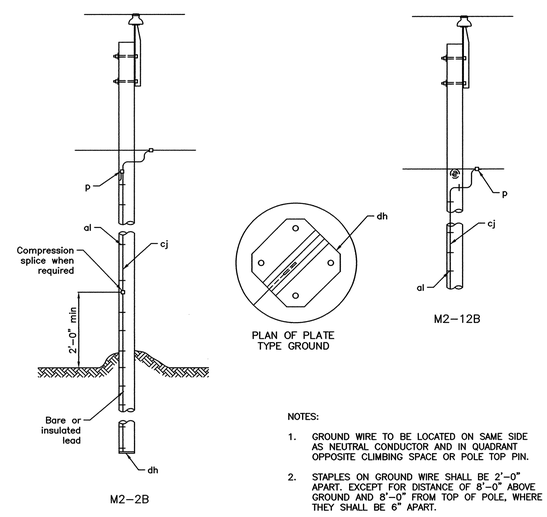

M2-2B

PLAN OF PLATE TYPE GROUND

M2-12B

NOTES:

1. GROUND WIRE TO BE LOCATED ON SAME SIDE AS NEUTRAL CONDUCTOR AND IN QUADRANT OPPOSITE CLIMBING SPACE OR POLE TOP PIN.
2. STAPLES ON GROUND WIRE SHALL BE 2'-0" APART. EXCEPT FOR DISTANCE OF 8'-0" ABOVE GROUND AND 8'-0" FROM TOP OF POLE, WHERE THEY SHALL BE 6" APART.
3. GROUND WIRE TO CLEAR ALL HARDWARE BY 2" MINIMUM, AND SHALL BE STAPLED TO MAINTAIN THIS POSITION.

ID.	QTY.	DESCRIPTION
al	–	STAPLES, AS REQUIRED
dh	1	BUTT PLATE
cj	–	WIRE, #6 SD CU, LENGTH AS REQUIRED
p	–	CONNECTORS, AS REQUIRED

GROUNDING ASSEMBLY PLATE TYPE

DATE: 2015

DETAIL NUMBER

M2-2B/12B

G S & P

Design Services For The Built Environment

Atlanta
Birmingham
Chipley
Cincinnati
Columbus
Dallas
Fort Lauderdale
Jackson
Jacksonville
Knoxville
Louisville
Memphis
Nashville
Richmond
Tampa

GRESHAM SMITH AND PARTNERS

2095 Lakeside Centre Way, Suite 120
Knoxville, Tennessee 37922
865.521.6777

WWW.GSPNET.COM

OVERHEAD 13kV HENDRIX DESIGN
GUM HOLLOW ROAD AND
NORTH ILLINOIS AVENUE
OAK RIDGE, TENNESSEE

REVISION		
No.	Date	Revision

CONSTRUCTION DETAILS
(SHEET 4 OF 4)

E1.14

SCALE: NONE
PROJECT: 41005.01
DATE: 2015