REV	DESCRIPTION	BY	DATE	–	----	--	--/--/--	–	----	--	--/--/--
–	----	--	--/--/--	–	----	--	--/--/--	–	----	--	--/--/--

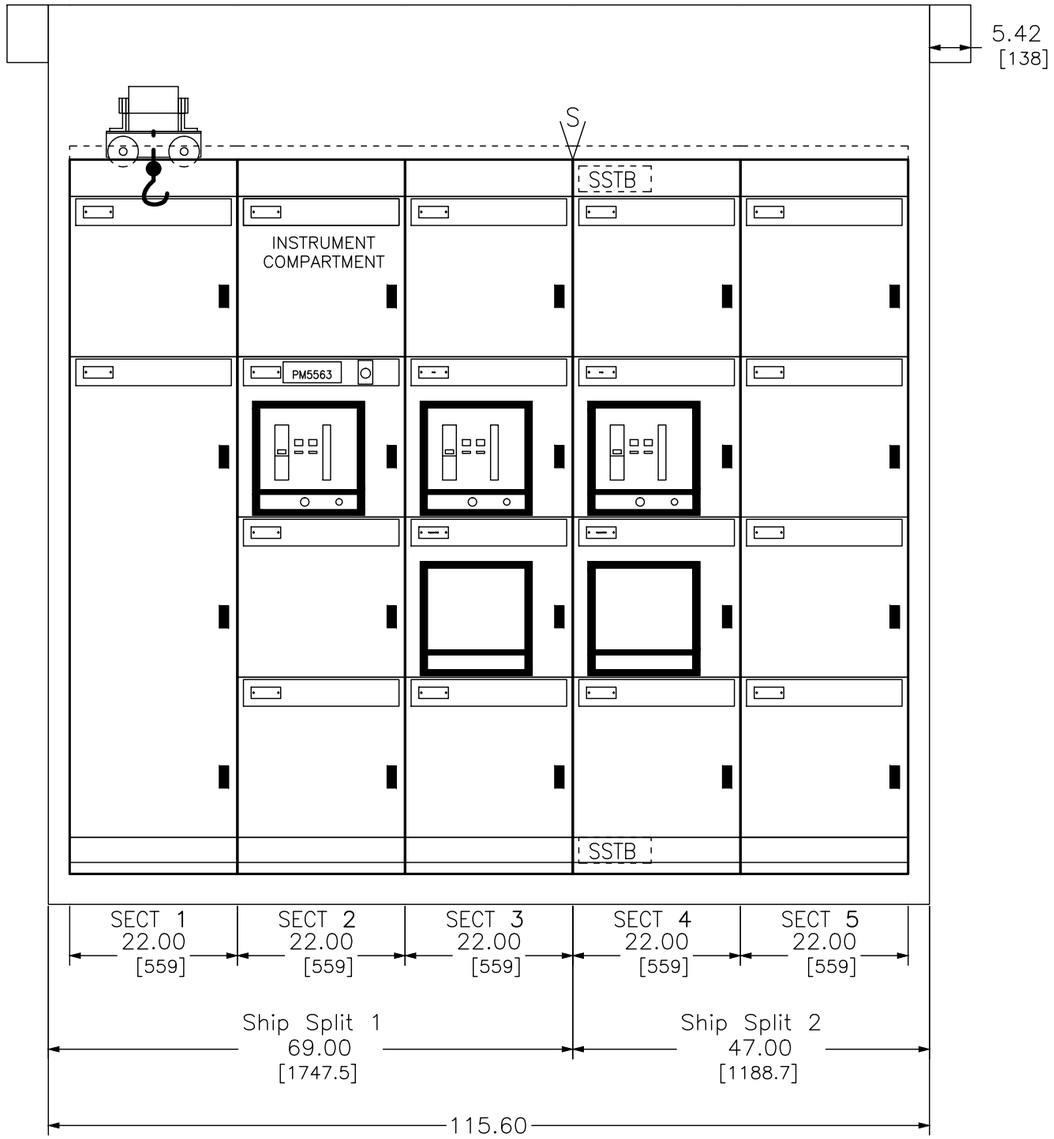

FRONT ELEVATION

JOB NAME:	CITY OF OAK RIDGE	EQUIPMENT DESIGNATION:	U–1
JOB LOCATION:	OAK RIDGE TN	EQUIPMENT TYPE:	QED–6 Switchboard
DRAWN BY:	(Q2C)	DRAWING TYPE:	ELEVATION
ENGR:			
DATE:	June 13 2016		
DRAWING STATUS:	QUOTE	DWG# F37132998–01	PG 1 OF 5 REV –

REV	DESCRIPTION	BY	DATE	–	----	--	--/--/--	–	----	--	--/--/--
–	----	--	--/--/--	–	----	--	--/--/--	–	----	--	--/--/--

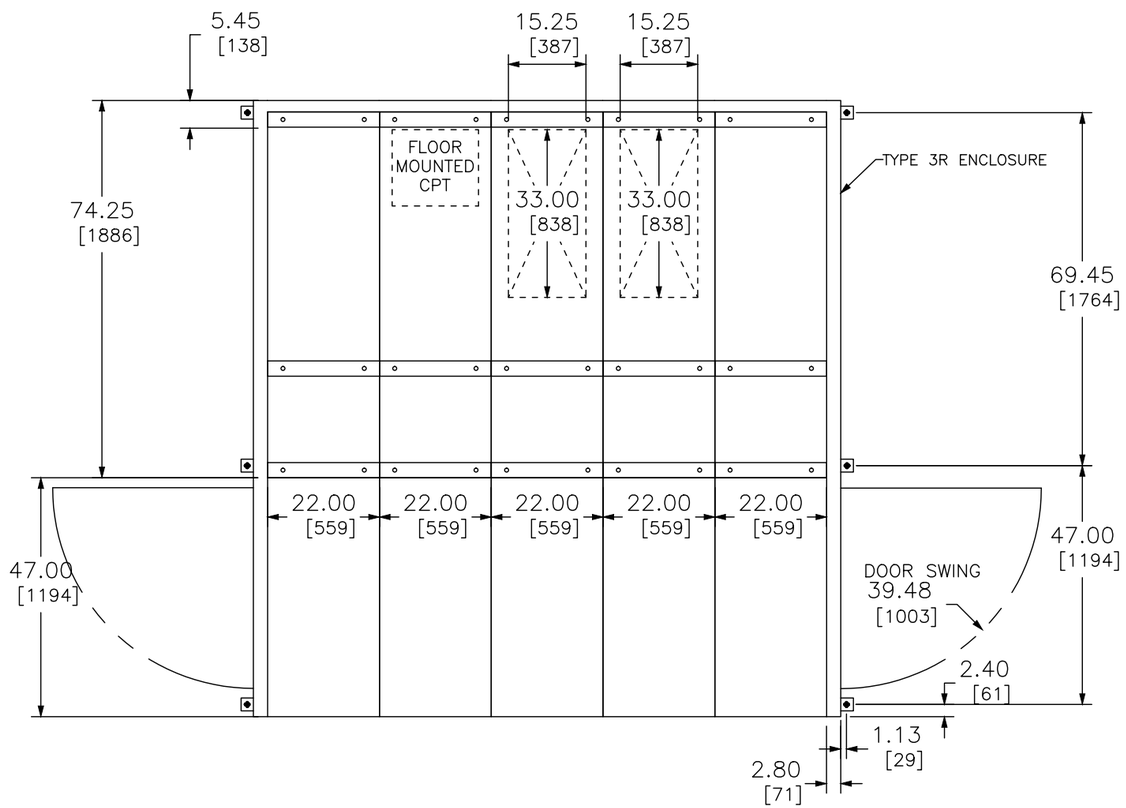

DUAL DIMENSIONS: INCHES
MILLIMETERS

FLOOR PLAN

JOB NAME:	CITY OF OAK RIDGE	EQUIPMENT DESIGNATION:	U–1
JOB LOCATION:	OAK RIDGE TN	EQUIPMENT TYPE:	QED–6 Switchboard
DRAWN BY:	(Q2C)	DRAWING TYPE:	TOP VIEW/FLOOR PLAN
ENGR:			
DATE:	June 13 2016		
DRAWING STATUS:	QUOTE	DWG# F37132998–01	PG 3 OF 5 REV –

REV	DESCRIPTION	BY	DATE	–	----	--	--/--/--	–	----	--	--/--/--
–	----	--	--/--/--	–	----	--	--/--/--	–	----	--	--/--/--

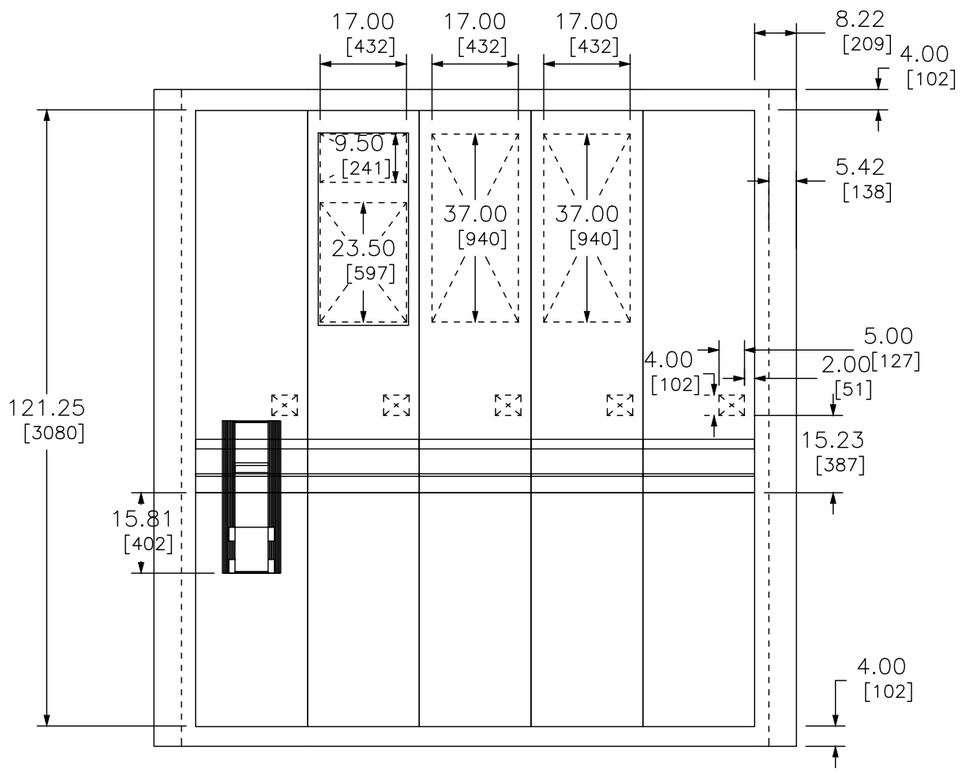

DUAL DIMENSIONS: INCHES
MILLIMETERS

TOP VIEW

JOB NAME:	CITY OF OAK RIDGE	EQUIPMENT DESIGNATION:	U–1
JOB LOCATION:	OAK RIDGE TN	EQUIPMENT TYPE:	QED–6 Switchboard
DRAWN BY:	(Q2C)	DRAWING TYPE:	TOP VIEW/FLOOR PLAN
ENGR:			
DATE:	June 13 2016		by Schneider Electric
DRAWING STATUS:	QUOTE	DWG# F37132998–01	PG 2 OF 5 REV –

REV	DESCRIPTION	BY	DATE	–	----	--	--/--/--	–	----	--	--/--/--
–	----	--	--/--/--	–	----	--	--/--/--	–	----	--	--/--/--

GENERAL NOTES

Product Description & Rating

Power System Data

480Y/277V 3Ph 4W 60 Hz.
Solidly Grounded Neutral
Neutral 100 Percent Of Main Bus Rating
Maximum Available Fault Current (RMS): 65kA
Bus Bracing (RMS): 65kA
Incoming Section Bay 2 Cable Top
Control Power: 10kVA–120V Secondary

Bus System Data

1600A Copper Bus, Silver Plated, Thermal Rated

Enclosure Data

Enclosure Type: Outdoor Type 3R Walk–In
Exterior Paint Color: ANSI 49
Bottom Plate/Rodent Proof
Space Heaters– NW Breaker Compartments
Space Heaters– Cable Compartments
Space Heaters– Bus Compartments
Thermostat for Space Heaters
Humidistat for Space Heaters

Estimated Shipping Weight

Ship Split 1 5983.68 LBS / 2714.15 KGS
Ship Split 2 3909.12 LBS / 1773.15 KGS

Code Standards

Equipment built to UL891 Code Standards
Incoming Section Bay 2 is Suitable for use as Service Entrance when not more than 6 disconnects are provided

Product Information

Wiring

Wires shall be labeled with destination marking (point–to–point)
NOTE: When connecting cables, use 90 degree Celsius insulated conductors based on the ampacity of 75 degree Celsius conductors unless otherwise indicated by supplemental instructions.

Instruction Bulletins

Refer to 80298–001–05 Instruction Bulletin for QED6 installation
Refer to 80298–156–01 Instruction Bulletin for NEMA3R installation

Shipping Instructions

Install 3 Pole Breakers For Shipment

Product Accessories

Modbus RS485 to Ethernet TCP – Communications Wired to Ethernet Gateway, Copper
24VDC Power Supply for Breaker Trip Unit Display and/or Communications
Alternate Maintenance Setting (AMS) Switch(s) Included in Lineup
Overhead Breaker Lifter with Rails

JOB NAME:	CITY OF OAK RIDGE	EQUIPMENT DESIGNATION:	U–1
JOB LOCATION:	OAK RIDGE TN	EQUIPMENT TYPE:	QED–6 Switchboard
DRAWN BY:	(Q2C)	DRAWING TYPE:	GENERAL NOTES
ENGR:			by Schneider Electric
DATE:	June 13 2016		
DRAWING STATUS:	QUOTE	DWG# F37132998–01	PG 5 OF 5 REV –

REV	DESCRIPTION	BY	DATE	–	----	--	--/--/--	–	----	--	--/--/--
–	----	--	--/--/--	–	----	--	--/--/--	–	----	--	--/--/--

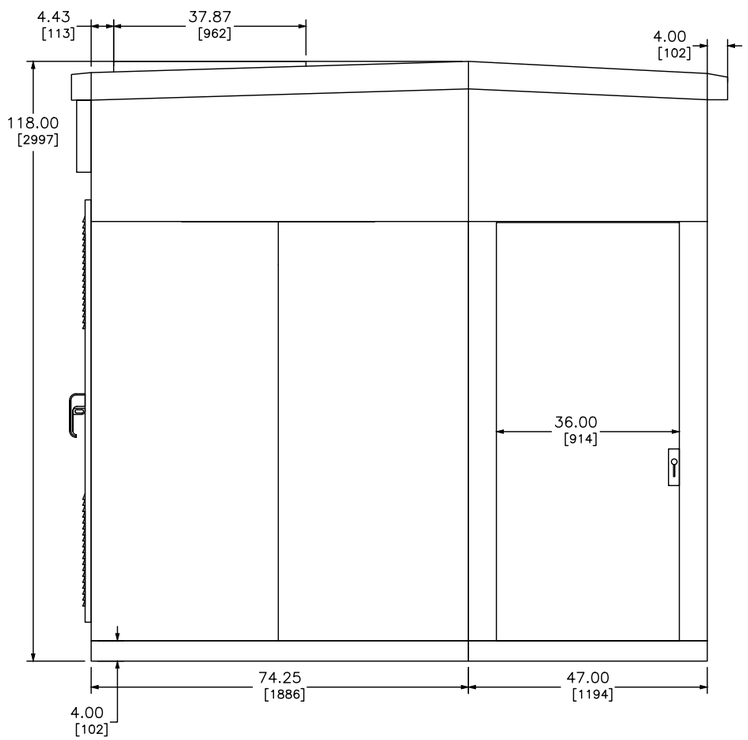

LEFT SIDE VIEW

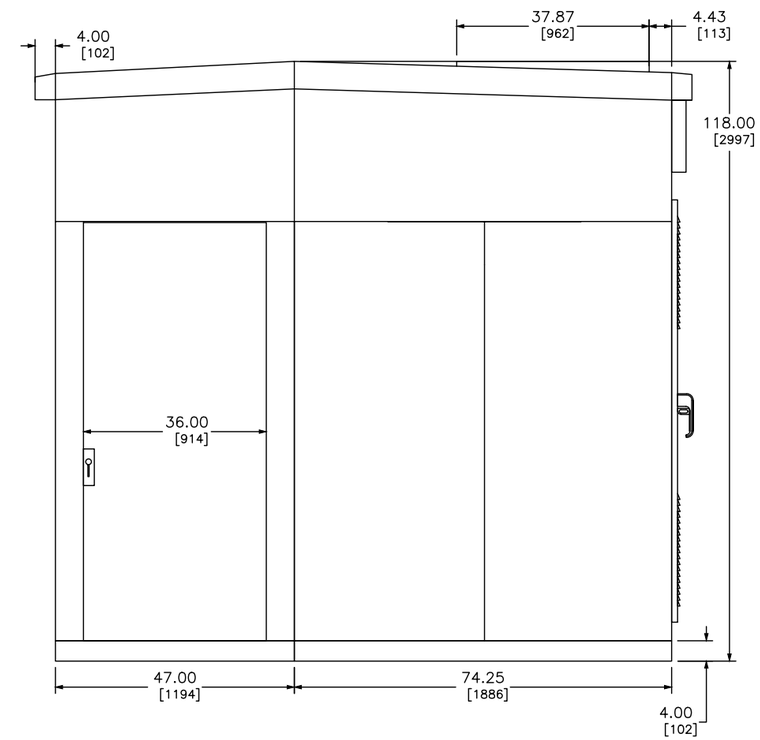

RIGHT SIDE VIEW

SIDE VIEWS

JOB NAME:	CITY OF OAK RIDGE	EQUIPMENT DESIGNATION:	U–1
JOB LOCATION:	OAK RIDGE TN	EQUIPMENT TYPE:	QED–6 Switchboard
DRAWN BY:	(Q2C)	DRAWING TYPE:	SIDE VIEW
ENGR:			
DATE:	June 13 2016		
DRAWING STATUS:	QUOTE	DWG# F37132998–01	PG 4 OF 5 REV –

REV	DESCRIPTION	BY	DATE	–	----	--	--/--/--	–	----	--	--/--/--
–	----	--	--/--/--	–	----	--	--/--/--	–	----	--	--/--/--

QED6 SWITCHBOARD – CIRCUIT BREAKER TABLE

CELL NO	BREAKER DESIGNATION ⚠1	BKR TYPE	BKR OPER	BREAKER TRIP UNIT	FRAME SIZE	SENSOR PLUG	TRIP SETTING	RATING PLUG	BKR AIC	TRIP PARAM	⚠2 LUGS PER PHASE: MECHANICAL						BREAKER AND CRADLE ACCESSORIES (NON STANDARD)
											QTY	A,B,C f SIZE	QTY	NEUT SIZE	QTY	GND SIZE	
2B		NWN	MANUAL	AMMETER	1600A	1600A	1600A	A	65kA	LSIG	5	3/0 – 750kcmil	5	3/0 – 750kcmil	1	3/0 – 750kcmil	CE1,CT1,CD1,MX1,XF,COM,MCT,PL,PBL
3B	P–61	NWN	MANUAL	AMMETER	800A	800A	800A	A	65kA	LSIG	3	3/0 – 750kcmil	3	3/0 – 750kcmil	–	–	CE1,CT1,CD1,MX1,XF,COM,PL,PBL
3C	Prepared SPACE	(NWN)	-----	(PREP SPACE)	800A	----	----	–	65kA	(LSIG)	3	3/0 – 750kcmil	3	3/0 – 750kcmil	–	–	CE1,CT1,CD1,COM
4B	P–62	NWN	MANUAL	AMMETER	800A	800A	800A	A	65kA	LSIG	3	3/0 – 750kcmil	3	3/0 – 750kcmil	–	–	CE1,CT1,CD1,COM,PL
4C	Prepared SPACE	(NWN)	-----	(PREP SPACE)	800A	----	----	–	65kA	(LSIG)	3	3/0 – 750kcmil	3	3/0 – 750kcmil	–	–	CE1,CT1,CD1,COM

LEGEND (ACCESSORIES)

	STANDARD ACCESSORIES FOR NW/NT
OF4	AUX CONTACTS – TYPE NW & NT (STD)
UC1	ZSI SECONDARIES (STD)
UC2	MODIFIED DIFFERENTIAL GROUND FAULT (STD)
UC3	24VDC POWER SUPPLY (STD)
SDE1	ELECTRICAL FAULT ALARM CONTACT (STD)
CPL	CRADLE PADLOCK ATTACHMENT
	NON–STANDARD ACCESSORIES
CE(X)	CONNECTED CELL SWITCHES (X=QTY)
CT(X)	TEST CELL SWITCHES (X=NUMBER OF)
CD(X)	DISCONNECTED CELL SWITCHES (X=QTY)
COM	COMMUNICATION or ERMS or FDM
M2C	2 PROGRAMMABLE CONTACT MODULE
M6C	6 PROGRAMMABLE CONTACT MODULE
SDE2	ADDITIONAL ELECTRICAL FAULT ALARM CONTACT
RES	ELECTRICAL RESET
MN	UNDERVOLTAGE TRIP
MX2	SHUNT TRIP

MX1	SHUNT TRIP
XF	SHUNT CLOSE
MCH	SPRING CHARGING MOTOR
MX1C	SHUNT TRIP WITH COMM'S
XFC	SHUNT CLOSE WITH COMM'S
PF	READY TO CLOSE CONTACT
OF(X)	AUX CONTACTS (X=QTY)
EF(X)	CONNECTED AND CLOSED SWITCHES (X=QTY)
SH(X)	SHUTTERS (P=POSITION, L=LOCK PROVISION)
MCT	METERING CT
PBL	PUSH BUTTON INTERLOCK COVER
AR	AUTOMATIC RESET
CDM	OPERATIONS COUNTER
PL	PADLOCK ATTACHMENT(REQD FOR KEYLOCK)
K	KEY INTERLOCK
CK	CRADLE KEY INTERLOCK
UC4	EXTERNAL VOLTAGE INPUTS
FDM	FRONT DISPLAY MODULE

NOTES

⚠1 ENGRAVED NAMEPLATES SHALL BE WHITE BACKGROUND WITH BLACK LETTERS.

⚠2 LUG QUANTITIES ARE BASED ON COPPER CABLES.

JOB NAME:	CITY OF OAK RIDGE	EQUIPMENT DESIGNATION:	U–1
JOB LOCATION:	OAK RIDGE TN	EQUIPMENT TYPE:	QED–6 Switchboard
DRAWN BY:	(Q2C)	DRAWING TYPE:	DEVICE TABLE
ENGR:			
DATE:	June 13 2016		
DRAWING STATUS:	QUOTE	DWG# 037132998–02	PG 1 OF 1 REV –

REV	DESCRIPTION	BY	DATE	-	----	--	--/--/--	-	----	--	--/--/--
-	----	--	--/--/--	-	----	--	--/--/--	-	----	--	--/--/--

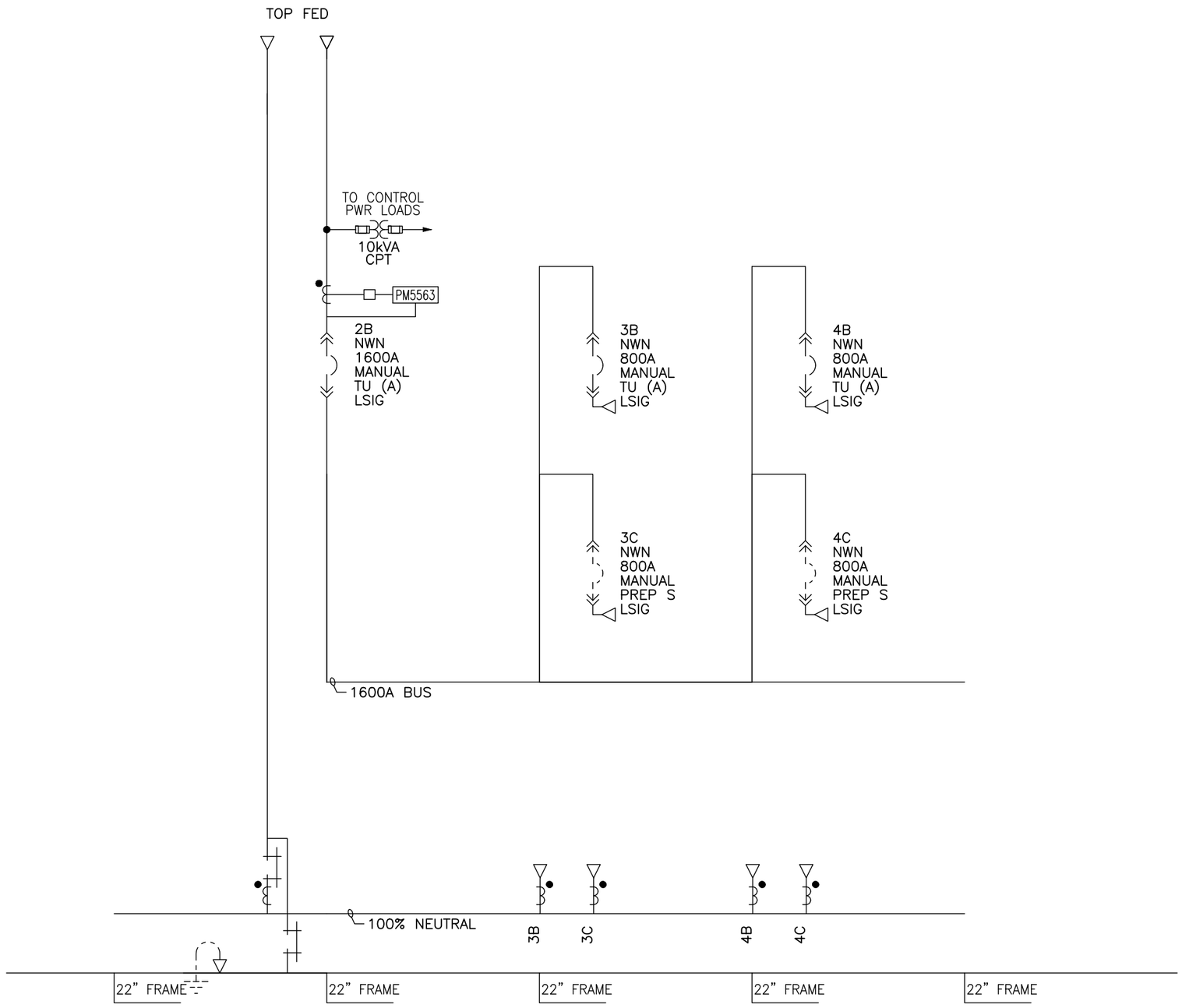

ONE LINE

JOB NAME:	CITY OF OAK RIDGE	EQUIPMENT DESIGNATION:	U-1
JOB LOCATION:	OAK RIDGE TN	EQUIPMENT TYPE:	QED-6 Switchboard
DRAWN BY:	(Q2C)	DRAWING TYPE:	ONE LINE
ENGR:			
DATE:	June 13 2016		
DRAWING STATUS:	QUOTE	DWG# 037132998-01	PG 1 OF 1 REV -