Batteries, Chargers, and Accessories Labor and Materials Specification

For

System Substation Batteries Project

for

CORED

City of Oak Ridge Electric Department

CONTRACT #FY2015-267

CLIFFORD K. HURST
REGISTERED ENGINEER
AGRICULTURE
COMMERCE
No. 102008
STATE OF TENNESSEE

4/21/15

Mesa Associates, Inc.

Batteries, Chargers, and Accessories Labor and Materials Specification

For

System Substation Batteries Project

for

CORED

City of Oak Ridge Electric Department

CONTRACT #FY2015-267

Mesa Associates, Inc.

Table of Contents

1. BIDDING INSTRUCTIONS 1-1

2. PROPOSAL DOCUMENTS 2-1

PROPOSAL 2-1
BID BOND 2-9
EQUAL OPPORTUNITY PROVISIONS 2-11
EQUAL OPPORTUNITY COMPLIANCE CERTIFICATE 2-12

3. SCOPE 3-1

4. APPENDIX A CONTRACT DOCUMENTS 4-1

LABOR & MATERIALS CONTRACT 4-1
PERFORMANCE BOND 4-4
PAYMENT BOND 4-6
WAIVER AND RELEASE OF LIEN 4-8
RELEASE FROM CONTRACTOR 4-9
GENERAL CONDITIONS 4-11
SPECIAL CONDITIONS 4-29

5. APPENDIX B DEFINITIONS OF TERMS 5-1

6. APPENDIX C DESIGN CALCULATIONS 6-1

1. BIDDING INSTRUCTIONS

1 You are invited to submit a Proposal for work to replace the system batteries, chargers, and accessories at nine (9) substations owned by the City of Oak Ridge, Oak Ridge, Tennessee.

2 It is the responsibility of each Bidder, before submitting a Bid, to (a) examine the Contract Documents thoroughly, (b) visit the site to become familiar with the local conditions that may affect cost, progress, performance or furnishing of the work, (c) consider federal, state and local laws and regulations that may affect cost, progress, performance or furnishing of the work, (d) study and carefully correlate Bidder's observations with the Contract Documents, and (e) notify the Engineer of all conflicts, errors or discrepancies in the Contract Documents.

3 The Owner does not obligate itself to accept the lowest or any other bid and specifically reserves the right to reject any and all bids.

4 The Bidder shall use the Proposal form provided. The Bidder shall take care to complete all portions of the Proposal documents and to provide all required submittals. Failure to fully comply may result in rejection of the bid.

5 **Bidder shall return on or before 11:00 A.M. May 12th 2015, three (3) originally signed copies of the Proposal documents and all submittals required to the owner**

6 Bidder shall make Four (4) complete sets of Proposal forms. Bidder shall: (1) submit their bid completely and properly on three (3) sets of forms; (2) leave the fourth set of forms bound in place in the Specifications and Contract Documents, but NOT filled in by the Bidder. Three (3) copies of each bid, WITHOUT the Specifications and Contract Documents, shall be enclosed in a separate sealed envelope with the following form completed and attached to the cover, with the words "BID FOR" followed by the Project. All required information must be completed on the form in subsection 15.0, and the form must be attached to cover of the sealed envelope containing your bid. Failure to show these items on the outside of the envelope containing the bid will result in the bid being returned to the Bidder unopened. If two (2) or more envelopes are used, the required information must appear on the outer envelope. The bound copy of the Specifications and Contract Documents SHALL NOT be returned with the bid.

7 No telegraphic or email bids will be accepted. Bids must be submitted on the provided Proposal forms only. A conditional or qualified bid will not be accepted.

8 The submission of a Bid will constitute an incontrovertible representation by Bidder that Bidder has complied with every requirement of the specification, that without exception the Bid is premised upon performing and furnishing the work required by the Contract Documents and such means, methods, techniques, sequences or procedure of construction as may be indicated in or required by the Contract Documents, and that the Contract Documents are sufficient in scope and detail to indicate and convey understanding of all terms and conditions for performance and furnishing of the work.

9 In the event that the Bidder's Proposal is accepted, and he fails or refuses to enter into the contract and furnish the required Performance and Payment Bonds within the time stated in

the Proposal, unless given a written extension of time by the Owner, then the Bidder will be considered as having abandoned his Proposal, and his bid guarantee will be retained by the Owner as liquidated damages. IT NOW BEING AGREED that the specified sum of the bid guarantee is a fair estimate of the amount of damages that the Owner will sustain in the case the Bidder fails to enter into the contract and furnish the Performance and Payment Bonds within the time stated in the Proposal.

10 The Proposal provides for quotation of a price, or prices, for one or more bid items, which may be lump sum bid prices, alternate bid prices, or a combination thereof. No payment will be made for items not set up in the Proposal, unless otherwise provided by contract amendment. All Bidders are cautioned that they should include in the process quoted for the various bid items as necessary allowances for the performance of all work required for the satisfactory completion of the Project.

11 **All questions about the meaning or intent of the Contract Documents are to be directed to the Engineer**. Interpretations or clarifications considered necessary by the Engineer in response to such questions will be issued by Addenda mailed or delivered to all parties recorded by the Engineer as having received the Bidding Documents. Questions received less than ten days prior to the date for opening of the Bids may not be answered. Only questions answered by formal written Addenda will be binding. Oral or other interpretations or clarifications will be without legal effect.

12 The Engineer for this project is:

Attn: Keith Hurst, P.E.
Mesa Associates, Inc.
10604 Murdock Road
Knoxville, TN 37932
khurst@mesainc.com
(865) 671-5400 Phone

13 The Owner for this project is:

Attn: Lyn Majeski
City of Oak Ridge
Finance Department
P.O. Box 1 (100 Woodbury Lane)
Oak Ridge, Tennessee 37831 (37830)
lmajoski@oakridgetn.gov
(865) 425-1819 Phone

14 The Engineer will represent the Owner in all matters pertaining to this project, including but not limited to, answering technical questions of prospective bidders, recommendation of awards, acceptance of shop drawings and similar documents, and approval of invoices prior to payment by the Owner.

15 The contract is a lump sum bid associated with the batteries, chargers, and accessories for nine substations on the City of Oak Ridge TN Electric Department's system and the removal for existing batteries and accessories at the nine stations.

16 Each Bid must be accompanied by a Bid security made payable to the Owner in the amount of five percent (5%) of the Bidder's maximum Bid price and in the form of a bank check or a Bid Bond. The Bid security of the Successful Bidder will be retained until such Bidder has executed the Agreement and furnished the required contract security. If the Successful Bidder fails to execute and deliver the Agreement and furnish the required contract security within fifteen (15) days after the Notice of Award, Owner may annul the Notice of Award and the Bid security of that Bidder will be forfeited. The Bid security of other Bidders whom Owner believes to have a reasonable chance of receiving the award, may be retained by the Owner until the earlier of the seventh day after the Effective Date of the Agreement or sixty (60) days after the Bid opening, after which the bid security will be returned upon request by the Bidder.

17 Each Bidder shall be a licensed Contractor as required by the State of Tennessee General Assembly's Contractor's Licensing Act of 1994, and all amendments thereto in effect on bid receipt date. Bidder's name, license number and its expiration date, and that part of classification applying to bid shall be shown on the outside of the envelope containing the bid. Failure to show these items on outside of the envelope will result in bid being returned to Bidder unopened.

18 Bids that are sent by mail shall be clearly marked "Bid Enclosed" or "Bid Envelope Enclosed" as appropriate. The sealed envelope containing the bid shall have the following information shown on the envelope:

BID FOR: LABOR AND MATERIALS
SYSTEM SUBSTATION BATTERIES
BID DUE: May 12TH , 2015

OWNER: Attn: Lyn Majeski
City of Oak Ridge
Finance Department
P.O. Box 1 (100 Woodbury Lane)
Oak Ridge, Tennessee 37831 (37830)
Phone: (865) 425-1819

BIDDER:_____
LICENSE NUMBER:_____
EXPIRATION DATE: _____
LICENSE CLASSIFICATION:_____

19 Bids may be modified or withdrawn by an appropriate document duly executed (in the manner that a Bid must be executed) and delivered to the place where Bids are to be submitted at any time prior to the opening of Bids. If, within twenty-four (24) hours after Bids are opened, any Bidder files a duly signed, written notice with Owner and promptly thereafter demonstrates to the reasonable satisfaction of Owner that there was a material and substantial mistake in the preparation of its Bid, that Bidder may withdraw its Bid and the Bid security will be returned. Thereafter, that Bidder will be disqualified from further bidding on the Work to be provided by under the Contract Documents.

20 Bids will be opened and unless obviously non-responsive read aloud publicly. An abstract of the amount of the base Bids and major alternatives (if any) will be made available to Bidders after the opening of Bids.

21 All bids will remain subject to acceptance for sixty (60) days after the day of the Bid opening, but Owner may, in its sole discretion, release any Bid prior to that date.

22 Owner reserves the right to reject any and all Bids, to waive any and all informalities not involving price, time or changes in the work and to negotiate contract terms with the Successful Bidder, and the right to disregard all nonconforming, non-responsive, unbalanced or conditional Bids. Also, Owner reserves the right to reject the Bid of any Bidder if Owner believes that it would not be in the best interest of the Project to make an award to that Bidder, whether because the Bid is not responsive or the Bidder is unqualified or of doubtful financial ability or fails to meet any other pertinent standard or criteria established by Owner.

23 In evaluating Bids, Owner will consider the qualifications of the Bidders, whether or not the Bids comply with the prescribed requirements, and such alternates, unit prices and other data, as may be requested in the Bid Form or prior to the Notice of Award.

24 Owner may consider the qualifications and experience of Subcontractors, Suppliers, and other persons and organizations proposed for those portions of the work as to which the identity of Subcontractors, Suppliers, and other persons and organizations must be submitted as provided in the proposal. Owner also may consider the operating costs, maintenance requirements, performance data and guarantees of major items of materials and equipment proposed for incorporation in the Work when such data is required to be submitted prior to the Notice of Award.

25 If the Contract is to be awarded, Owner will give the Successful Bidder a Notice of Award within sixty (60) days after the day of the Bid opening.

26 When Owner gives a Notice of Award to the Successful Bidder, it will be accompanied by the required number of unsigned counterparts of the Agreement with all other written Contract Documents attached. Within fifteen (15) days thereafter Contractor shall sign and deliver the required number of counterparts of the Agreement and attached documents to Owner with the required Bonds. Within ten (10) days thereafter, Owner shall deliver one (1) fully signed counterpart to Contractor. Each counterpart is to be accompanied by a complete set of the Drawings with appropriate identification.

27 The Contractor shall include all applicable sales and use taxes in his Bid. Note: The City of Oak Ridge is exempt from sales tax.

28 The successful Bidder shall execute a Performance Bond and a Payment Bond, each in the amount of one hundred percent (100%) of the Total Bid (refer to Schedule of Prices), issued by a Surety Company licensed to operate in the State of Tennessee. The bonds shall be executed on standard forms furnished by the Surety Company that are acceptable to the Owner.

29 Buy American Clause: Bidders are hereby notified that they are encouraged, to the greatest extent practicable, to provide American-made equipment and products meeting specifications. Proposal shall indicate American content.

30 Experience. Provide a complete list of (not less than three) installations of similar nature within the past five years.

2. PROPOSAL DOCUMENTS

PROPOSAL

FOR

System Substation Batteries Upgrade Project

CONTRACT #FY2015-267

CITY OF OAK RIDGE, TENNESSEE
100 Woodbury Lane
Oak Ridge, Tennessee 37831-0001

ATTN: Purchasing Agent

2.1 GENERAL

The undersigned Bidder, _____, herewith proposes to perform all work, including providing management, information and reports, labor, material, construction facilities, tools, equipment, and services, except the specific materials and services to be furnished by the Owner or by others, required for work and performance of related work for the Substation Battery Replacement Project for the City of Oak Ridge, Oak Ridge, Tennessee; as set forth in the Contract documents, within the time, at the rate and in the manner required, for the prices named in the following Schedule of Prices and agrees to execute a valid contract, which Contract shall include the Agreement, Insurance Requirements, General Conditions, Special Conditions, Scope of Work, Technical Specifications, and Drawings in the form attached hereto and made a part hereof.

The Bidder further agrees that in case the Contract is awarded to him, he will begin actual work within _____ calendar days after receipt of a "Notice to Proceed" at the points designated by the Owner, that he will maintain the rate of progress set forth in his work schedule and that he will complete the work on or before the dates of completion set forth in the Contract.

2.2 PRICING

SCHEDULE OF PRICES

It is not the intent of the Owner to subdivide award of the work.

LUMP SUM, FIXED PRICE ITEMS:

		LABOR	MATERIAL	TOTAL
A.	Substation 100			
B.	Substation 200			
C.	Substation 300			
D.	Substation 400			
E.	Substation 500			
F.	Substation 600			
G.	Substation 700			
H.	Substation 800			
I.	Substation 900			
J.	Lump Sum Subtotal (initial amount to contractor)			
K.	Authorized Amendments			$20,000
L.	Total Bid Amount (used for bonding)			

2.3 MEASUREMENT AND PAYMENT

The Measurement and Payment requirements related to the above prices are as follows:

A. Payment will be made in accordance with progress of work, minus any retainage.

B. Mobilization, supervision, temporary facilities, safety, security, insurance, overhead and profit shall be included in the prices.

2.4 WORK SCHEDULE

A. Provide your best completion date for this work _____.

2.5 SUPERINTENDENT'S EXPERIENCE

The Bidder proposes to have as job superintendent on the work, if awarded the Contract, _____, whose experience record in responsible control on work of this character is as follows:

Project Description	Dates of Service	Position
_____	_____	_____
_____	_____	_____
_____	_____	_____
_____	_____	_____

Will Superintendent act as Quality Control Inspector ? _____Yes _____NO
If not, name of Quality Control Inspector is: _____

2.6 SUBCONTRACTORS

Bidder proposes to subcontract specific portions of the work to the following subcontractors:

Subcontract Work	Subcontractors' Names and Addresses

2.7 CONTRACTOR'S SAFETY PERFORMANCE

Please complete the following:

A. What is your firm's Recordable Injury Incident Rate for field operations for the most recent full year?

_____

B. Do you have a written Accident Prevention/Safety Program for field operations?

YES___ NO___

C. Do you conduct Project Safety Inspections?

YES___ NO___

If YES, who conducts these inspections from the site staff?

TITLE:_____ HOW OFTEN?_____

D. Do you have a home office safety representative who visits and inspects the job?

YES___ NO___

What is his name and title?_____

How often will he visit the site?_____

Does he have the authority to make corrections? YES___ NO___

E. Do you hold site Safety Meetings of Supervisors?

YES___ NO___ HOW OFTEN?_____

Who conducts these meetings? TITLE_____

F. Do you hold craft "toolbox" safety meetings?

YES___ NO___

If YES, how often?_____

Who conducts these meetings? TITLE_____

Are minutes kept of these meetings? YES___ NO___

G. Does your company have a written policy on drug and alcohol abuse?

YES___ NO___

If so, how is it disseminated? Handout Meeting

Other (specify)

H. Do you have a safety orientation meeting for:

New hires? YES___ NO___

Newly hired or promoted foremen? YES___ NO

2.7 INSURANCE

The Bidder, as Contractor, shall conform to the Insurance Requirements attached and shall include the cost of insurance and performance bonds in the Contract Price.

The successful Bidder shall, before commencing work on this Contract, deliver to the Owner, three (3) copies of Certificates of Insurance, completed by his insurance carrier or agent, certifying that minimum coverage, as required, are in effect. Certificates shall indicate Contractor's name, and Contract number. Duplicate copies of insurance policies shall be furnished to the Owner within ten (10) days after the execution of the Contract when so requested by the Owner. The foregoing shall also apply to subcontractors.

2.8 EXCEPTIONS

If the Bidder takes any exception of either a technical or commercial nature to the Request for Proposal, it is **mandatory** that the exceptions shall be itemized, explained, and identified as "Commercial Exceptions" or "Technical Exceptions" by the Bidder on the form provided.

In any instance where Bidder fails to take specific exceptions and provides a quotation with its own formal terms, such terms and conditions shall in no event be binding, and any contract resulting from this invitation will be governed by Owner's terms and conditions. Where no exception is taken, this will constitute a waiver of all rights to take exception to the terms of the bid documents up to and including the date of award of any resulting contract.

Exceptions or clarifications _____ (are or are not) included.

2.9 ADDITIONAL INFORMATION

The following person should be contacted for any questions to the Bidder concerning this Proposal:

Name _____ Telephone_____.

2.10 RECEIPT OF DOCUMENTS

The Bidder hereby acknowledges that he has received and taken into consideration all the bidding documents including:

Addenda Nos. __ __ __ __ __ __
Other _____

If no addenda is received, insert "None".

2.12 PROPOSAL EXECUTION

The undersigned Bidder declares that he or his agent has carefully examined the location of the proposed work, the proposed form of Contract and the intended Contract documents and is informed as to local conditions affecting the proposed work, and that he understands that the Owner reserves the right to reject any or all Proposals. This Proposal shall be valid for a period of not less than sixty (60) days from the date below:

The Bidder is (Please Indicate Below):

An Individual _____

A Corporation of the state of _____

A Partnership consisting of_____

A Joint Venture comprised of_____

Full Company Name_____

By _____

Title_____

Date_____

Business Address _____

_____

Telephone Number _____Fax_____

Contractor License Number and Type _____

Federal Tax ID Number _____

2.13 EXCEPTIONS AND CLARIFICATIONS

Commercial Exceptions:

Commercial Clarifications:

Technical Exceptions:

Technical Clarifications:

2.14 INSURANCE REQUIREMENTS

Without limiting any of the other obligations or liabilities of the Contractor, the Contractor shall provide and maintain, until the Contract work is completed (unless otherwise indicated), minimum insurance coverage as follows:

TYPE OF INSURANCE	MINIMUM LIMITS OF LIABILITY	EACH OCCURRENCE	AGGREGATE
GENERAL LIABILITY			
☒ COMPREHENSIVE FORM (See Note 1)	BODILY INJURY	$1,000,000	
☒ PREMISES-OPERATIONS	PROPERTY DAMAGE	$1,000,000	$1,000,000
☒ EXPLOSION AND COLLAPSE HAZARD	- - - - - - - OR - - - - - - -		
☒ CONTRACTUAL INSURANCE (See Note 2)	BODILY INJURY AND	$1,000,000	$2,000,000
☒ BROAD FORM PROPERTY DAMAGE	PROPERTY DAMAGE		
(See Note 3)	COMBINED		
☒ INDEPENDENT CONTRACTORS			
☒ UNDERGROUND HAZARD			
☒ PRODUCTS/COMPLETED OPERATIONS HAZARD (See Note 4)	PRODUCTS/COMPLETED OPERATIONS		$3,000,000
☒ PERSONAL INJURY	PERSONAL INJURY		$1,000,000
AUTOMOBILE LIABILITY			
☒ COMPREHENSIVE FORM	BODILY INJURY AND	$1,000,000	
☒ OWNED	PROPERTY DAMAGE		
☒ HIRED	COMBINED		
☒ NON-OWNED			
EXCESS LIABILITY	BODILY INJURY AND	$2,000,000	
☒ UMBRELLA FORM	PROPERTY DAMAGE		
	COMBINED		
WORKERS' COMPENSATION (See Note 5)	STATUTORY		
AND		$500,000	
EMPLOYERS' LIABILITY		(EACH ACCIDENT)	

NOTES:
1. Including Contractor's Protective Liability and, if applicable, Incidental Malpractice.
2. Including coverage for liability assumed in construction agreements and other types of contracts or agreements in effect in connection with the insured operations.
3. Coverage for damage to property in the care, custody or control of insured.
4. Completed operations shall remain in effect for at least two years after completion of the project.
5. Including coverage under United States Longshoremen's and Harbor Workers' Act where applicable.

With respect to General Liability, Automobile Liability, and Excess Liability above, coverage shall extend to Owner and the Engineer, and their respective subsidiaries and employees shall each be made Additional Insureds and the cross liability clause below shall be made part of the policy. The insurer shall waive subrogation against the Owner and the Engineer. Contractor shall cause its lower-tier contractors at the jobsite to obtain and maintain insurance policies to protect Owner and Engineer in accordance with the above requirements. All insurance provided by Contractor and its lower-tier contractors shall be primary and any similar insurance maintained by Owner and/or Engineer shall be excess thereof and not contributing with Contractor's or its lower-tier contractors' insurance.

Before commencing work under this Contract, the Contractor shall deliver to the Owner a Certificate of Insurance completed by his insurance carrier or agent certifying that minimum insurance coverage as required above are in effect and will not be cancelled or changed until thirty (30) days after written notice is given to the Owner. The certificate shall indicate the exact coverage as required herein and include, except for Workers' Compensation and Employers' Liability, the following:

CROSS LIABILITY CLAUSE

The inclusion of more than one corporation, person, organization, firm or entity as insured under this policy shall not in any way affect the rights of any such corporation, person, organization, firm or entity as respects any claim, demand, suit or judgment made, brought or recovered, by or in favor of any other insured, or by or in favor of any employee of such other insured. This policy shall protect each corporation, person, organization, firm or entity in the same manner as though a separate policy had been issued to each, but nothing herein shall operate to increase the insurance company's liability as set forth elsewhere in this policy beyond the amount for which the insurance company would have been liable if only one person or interest had been named as insured.

The City of Oak Ridge shall be named as an additional insured.

BID BOND

KNOW ALL MEN BY THESE PRESENTS, that we, the undersigned, as Principal, and_____ as Surety, are hereby held and firmly bound unto_____ as OWNER in the penal sum of _____for payment of which, well and truly to be made, we hereby jointly and severally bind ourselves, successors and assigns.

Signed, this _____ day of _____, 20_____.

The Condition of the above obligation is such that whereas the Principal has submitted to a certain BID, attached hereto and hereby made a part hereof to enter into a contract in writing, for the

NOW, THEREFORE,

(a) If said BID shall be rejected, or

(b) If said BID shall be accepted and the Principal shall execute and deliver a contract in the Form of Contract attached hereto (properly completed in accordance with said BID) and shall furnish a BOND for his faithful performance of said contract, and for the payment of all persons performing labor or furnishing materials in connection therewith, and shall in all other respects perform the agreement created by the acceptance of said BID, then, this obligation shall be void, otherwise the same shall remain in force and effect; it being expressly understood and agreed that the liability of the Surety for any and all claims hereunder shall, in no event, exceed the penal amount of this obligation as herein stated.

The Surety, for value received, hereby stipulates and agrees that the obligations of said Surety and its BOND shall be in no way impaired or affected by any extension of the time within which the OWNER may accept such BID; and said Surety does hereby waive notice of any such extension.

IN WITNESS WHEREOF, the Principal and the Surety have hereunto set their hands and seals, and such of them as are corporations have caused their corporate seals to be hereto affixed and these presents to be signed by their proper officers, the day and year first set forth above.

_____ (L.S.)
Principal

Surety

By:

IMPORTANT -- Surety companies executing BONDS must appear on the Treasury Department's most current list (circular 570 as amended) and be authorized to transact business in the state where the project is located.

EQUAL OPPORTUNITY PROVISIONS

1.0 This Contract is subject to the provisions of Section 202 of Executive Order Number 11246 of September 24, 1965 as amended relating to Equal Opportunity and to the Affirmative Action requirements of 41CFR60. The Contractor, in performing the work or services of this contract, shall not discriminate against any person seeking employment with or by the contractor because of race, creed, color, sex, or national origin, sexual orientation, disability, or other legally protected status.

2.0 The City of Oak Ridge, Tennessee encourages the utilization of minority and women-owned businesses in its contracting and subcontracting projects and the Bidder is encouraged to actively solicit the participation of these businesses.

3.0 Each Bidder shall complete the following Equal Opportunity Compliance Certificate as part of the submitted proposal.

EQUAL OPPORTUNITY COMPLIANCE CERTIFICATE

We hereby certify:

As a(n):_____ Division of Parent Company _____

_____ Subsidiary

_____ Affiliate Address _____

_____ Separate Corporation _____

And being: _____ a Small Business (Ref: ASPR-1-701-1)

_____ Minority Owned Business (Ref: 41CFR-1.701-1)

_____ from a Labor Surplus Area (Ref: 41CFR 1-1.801-1);

Having _____ employees in all divisions , subsidiaries, affiliates and parent (number) company;

That we shall comply with the applicable portions of the Equal Opportunity Clause as promulgated under Executive Order 11246. September 24, 1965 as amended, and all other federal laws and regulations pertaining to the Equal Employment Opportunity and Affirmative Action obligations of Federal Government Contractors, and shall submit the required compliance reports, and shall maintain non-segregated facilities.

Contractor _____

Address _____

_____

Signature of Authorized Representative_____

Date of Signing _____

3. SCOPE

3.1. Purpose. This specification defines requirements for flooded-type, lead-acid storage batteries, chargers, and accessory equipment for emergency backup power for the City of Oak Ridge Electric Department (CORED).

3.2. Definitions

3.2.1. Owner – City of Oak Ridge Electric Department (CORED)

3.2.2. Seller (Contractor) – Battery supplier & Installer to CORED

3.2.3. Engineer – Mesa Associates, Inc.

3.3. Work to be provided. Seller shall provide the following:

3.3.1. Design, manufacture, shop test, and deliver & Install charged batteries and accessory equipment.

3.3.2. Deliver all equipment packaged to provide protection during transportation and recommended storage requirements.

3.3.3. Provide technical manuals, and startup procedures for the Owner.

3.3.4. Provide all special tools required for installation, startup, operation, maintenance, and adjustment.

3.3.5. Installation of a temporary DC supply to maintain substation during change over of Batteries.

3.3.6. Removal and Disposal of existing materials including but not limited to Batteries (NiCad), Battery Charger and stands. Contractor must meet all local, state, and federal requirements when disposing of materials.

3.3.7. Installation of new battery systems including chargers. Providing and installing all wiring between battery cells, battery and charger, and batteries and DC panel board. Minimum wiring between cells shall be per manufactures recommendation. Minimum wiring from charger to DC Panel shall be #10 copper, and minimum wiring from batteries to DC panel shall be #4/0 copper.

3.3.8. Any and all battery/substation outages shall be coordinated with CORED prior to work. Do not assume a substation can be de-energized for this work.

3.3.9. Upon completion of installation per substation, contractor shall functionally test new battery system to ensure operation.

3.4. Work provided by the Owner.

3.4.1. Any high voltage switching as necessary

3.4.2. Coordination of any required outages

3.5. Warranty. Seller shall warrant that the batteries shall perform as specified for a period of 20 years.

3.5.1. Provide the value of each battery for warranty purposes in determining a short-life adjustment.

3.5.2. Provide a formula for calculating the pro-rated credit to be given to the Owner towards the purchase of a new battery for cases where a battery fails before its guaranteed useful service life.

3.5.3. Provide an example to illustrate how the credit will be computed.

3.6. APPLICABLE DOCUMENTS

The following documents form a part of this specification to the extent stated herein. Unless otherwise indicated, use the issue in effect on the date of request for quotation. Bring any conflicts between this specification and the referenced documents to the attention of the Owner, in writing, for resolution before taking any related action. Where differences exist between codes and standards, the one affording the greatest protection shall apply.

3.6.1. Government publications.

3.6.2. 29 CFR 1910 Occupational Safety and Health Standards (Fed/OSHA)

3.6.3. 29 CFR 1910.7 Definitions and Requirements for a Nationally Recognized Testing Laboratory (NRTL)

3.6.4. IEEE 100 Dictionary of Electrical and Electronics Terms

3.6.5. IEEE 450 Recommended Practice for Maintenance, Testing and Replacement of Large Lead Storage Batteries for Generating Stations and Substations
3.6.6. IEEE 484 Recommended Practice for Installation Design and Installation of Large Lead Storage Batteries for Generating Stations and Substations
3.6.7. IEEE 485 Recommended Practice for Sizing Large Lead Storage Batteries for Generating Stations and Substations
3.6.8. SBCCI Standard Building Code
3.6.9. NFPA 70 National Electrical Code Art. 480 Storage Batteries
3.6.10. NFPA 111 Stored Electrical Energy and Standby Power Systems
3.6.11. UL 94 Tests for Flammability of Plastic Materials for Parts in Devices and Appliances
3.6.12. UL 486A Wire Connectors and Soldering Lugs for use with Copper Conductors

3.7. Order of precedence. In the event of conflict between the text of this document and the references cited herein, the text of this document takes precedence. Nothing in this document, however, supersedes applicable laws and regulations unless a specified exemption has been obtained.

4. REQUIREMENTS

4.1. System characteristics. The storage batteries will be used to supply DC power under emergency conditions at the DC voltages and for the DC power system. The batteries shall be in accordance with article 480 of NFPA 70. The batteries shall be complete in all respects, with all required accessories. Only flooded-type lead-acid cells are acceptable. The cells provided shall have fire-retardant jars and covers and shall be provided with flame-arrester type vents.

4.1.1. Battery is Used in a non-Grounded DC System
4.1.2. Plante Type
4.1.3. Positive-Plate Construction-Pasted plate
4.1.4. End-of-Duty Cycle Voltage or Minimum Voltage During Duty Cycle 1.75 V/cell
4.1.5. Specific Gravity 1.250

4.2. Performance.

4.2.1. Operating environment. Each battery and associated equipment shall meet the performance requirements of this specification while operating under the environmental conditions specified below.

4.2.1.1. Elevation Above Mean Sea Level 1000 ft
4.2.1.2. Battery Room Ambient Temperature Range 70 to 80°F (21 to 27°C)
4.2.1.3. Battery Room Ambient Design Temperature 60°F
4.2.1.4. Battery Room Maximum Design Temperature (i.e., HVAC Failure) 100°F
4.2.1.5. Battery Room Relative Humidity Range 20 to 55%
4.2.1.6. Other (e.g. salt-laden air, dust) None

4.2.2. Duty cycle. The batteries shall be designed to supply continuous loads including future SCADA system for a minimum of eight (8) hours then be able to perform a worst case trip event. See Appendix C for loading. Each battery shall perform in accordance with the requirements of its respective duty cycle at any time, including at time of delivery and when the battery has reached its rated life.

4.2.3. Capacity. Batteries shall be greater than or equal to 90% rated capacity at the time of delivery.

4.2.4. Charging cycle. The batteries shall be assumed to be fully charged and stabilized at the open-circuit voltage just prior to commencement of the duty cycle. During normal operation, each battery shall be continuously float-charged by its battery charger.

4.2.5. Recharge time. The desired recharge time to 100% rated capacity is 8 hours following a discharge based upon the duty cycle, and 8 hours following a performance-test discharge in accordance with IEEE 450. Charging shall be accomplished at 2.33 V per cell.

4.2.6. Battery sizing. The following additional sizing factors for the specified service conditions shall be based on the constant current method in accordance with IEEE 485.

4.2.6.1.1. Temperature correction factor of 1.11

4.2.6.1.2. Design margin factor of 1.10

4.2.6.1.3. Aging factor of 1.25 in accordance with IEEE 485

4.2.7. Seismic requirements.

4.2.7.1. Seismic qualifications.

4.2.7.1.1. The battery rack furnished shall be certified for seismic zone 2A such that the battery can perform its intended function during and after a seismic event.

4.2.7.1.2. Design equipment and equipment supports to withstand and maintain their structural integrity when exposed to seismic loading indicated above. The equipment structures shall be completely self supporting.

4.2.7.1.3. Support design shall not include friction for resisting the lateral shear load.

4.2.7.1.4. The maximum stresses, under seismic loading combined with all other load effects, shall be within the normal allowable material working stress limits as set forth in the appropriate references listed in this specification.

4.2.7.1.5. Investigate any deformations resulting from the combined influence of normal-operating loads and seismic loads, to verify they will not impair structural integrity.

4.2.7.2. Demonstration of integrity. Demonstrate the equipment's ability to withstand and maintain its structural integrity when subjected to the forces resulting from the seismic conditions specified. This shall be accomplished in one or a combination of the following methods:

4.2.7.2.1. Predict the equipment's performance and response to a seismic force by mathematical static analysis;

4.2.7.2.2. Test the equipment under simulated seismic conditions (static or dynamic testing); and/or

4.2.7.2.3. Utilize previous seismic certification of the equipment (or equivalent equipment if equivalence can be shown,) and demonstrate applicability under the seismic conditions specified.

4.2.7.3. Seismic loading – Battery system shall be design per NHRP 2000 and IBC 2000 codes based on project location of Oak Ridge Tennessee.

4.3. Design and construction.

4.3.1. Materials. All materials shall be new and selected to perform as specified. Like parts shall be interchangeable. Workmanship shall be neat, comply with recognized industry standards, and be in accordance with accepted engineering practices. All connectors and terminal details shall be lead-plated copper. All connector hardware such as bolts, washers, and nuts shall be type 316 stainless steel.

4.3.2. Battery Type.

4.3.2.1. Batteries shall be of the flooded lead-acid type. All cells shall be completely assembled and shall be shipped in accordance with Section 8.

4.3.2.2. Batteries shall be of the Plante type, with positive and negative plates of Seller's standard design. Active materials shall be retained in structures designed to retard corrosion and withstand overcharging. Negative plates shall have a life equal to or greater than that of positive plates.

4.3.3. Cell features.

4.3.3.1. Each cell element shall be in a fire-retardant, high-impact transparent plastic jar and cover. The jar and cover material shall have a limiting oxygen index (LOI) of at least 28%.

4.3.3.2. Cement or otherwise fasten cell covers to containers to form a leakproof and gas-tight seal, and fit with sprayproof vents. The vent plug shall be the flame-arrester type.

4.3.3.3. Size jars to prevent compression of the plates, and to allow space at the bottom for sediment that may accumulate during the life of the battery, yet prevent

contact between the sediment and the plates. Design cells to accommodate plate growth such that the jar and cover will not crack.

4.3.3.4. Where applicable, mark all four sides of each cell jar with high and low electrolyte-level lines.

4.3.3.5. All cells shall be suitable for float at 2.25 V per cell and equalize at 2.33 V per cell. The minimum discharge voltage shall be 1.75 V per cell.

4.3.3.6. Support plates so that no undue stress is placed on the jar or cover during the life of the battery. Negative and positive plates shall be matched. Reinforce the plates as needed to retain their shape and maintain the low internal resistance necessary to carry the current to or from all parts of the plate under all operating conditions. Separators and retainers shall be impervious to the chemical action within the cell, and shall provide proper spacing and insulation between the plates to permit free circulation of electrolyte.

4.3.3.7. Provide the battery complete with electrolyte. The specific gravity of the electrolyte in the lead-acid batteries at 77°F (25°C) shall be 1.250 nominal.

4.3.3.8. Provide the cells with separators and retainer mats. Separators shall be microporous rubber; retainers shall be glass fiber.

4.3.4. Battery racks.

4.3.4.1. Provide battery racks made of steel, properly insulated and coated in accordance with paragraph 4.6. The paint shall resist the corrosive effects of the battery electrolyte. The racks shall vary by station as to the type but come complete with all necessary steel frames, fittings, rails and braces, plastic insulating channels, plastic spacers and hardware. Provide earthquake-rated hardware.

4.3.4.2. The racks shall permit battery mounting in the rooms and shall permit easy battery maintenance. Provide a minimum of 14 inches (350 mm) clearance from the top of the battery-jar flame arresters to the bottom of the rack above.

4.3.4.3. Each rack shall have a ground-loop connection point and a lead-plated terminal lug from Seller's standard manufacturer for the Owner's ground conductor.

4.3.4.4. Where racks are shipped unassembled, number or match-mark all parts to facilitate field assembly and provide installation instructions.

4.3.4.5. Racks and rack anchorage shall be seismic rated as indicated in paragraph 4.2.7.

4.3.5. Terminals and connectors.

4.3.5.1. Connectors shall meet the requirements of UL 486A or comparable standard by any nationally recognized testing laboratory (NRTL) recognized under 29 CFR 1910.7.

4.3.5.2. Clearly mark each cell post for permanent identification of polarity, and seal to the cover.

4.3.5.3. Provide lead-plated copper bus bar connectors for connecting the jars in series. All connecting bus and hardware shall be able to carry the 3-hour rating of the battery, or a continuous current equal to the battery's end-of-discharge voltage of 1.75 V per cell, whichever provides the higher current-carrying capability. This shall be accomplished without exceeding a temperature rise of 30°C above ambient. Provide insulated cable connectors between steps and between jars on different rack sections where the rack sections are located adjacent to each other, or back-to-back. Arrange cable on the racks to prevent external mechanical damage. Provide details of copper terminal connectors that are completely lead-plated.

4.3.5.4. For jars mounted on the same step or tier of a battery rack, provide interjar connectors of such a length as to allow an air space of approximately 1/2 inch (13 mm) between jars.

4.3.5.5. Contractor will provide the cable interconnections between the battery string (positive and negative terminals) and the battery charger. The Contractor shall

also provide the inter-rack and inter-tier cabling where rack sections are not arranged end-to-end or back-to-back. Provide 2-hole compression-type lead-plated connectors sized to accommodate cables in sizes specified below. Provide multi-cable terminal connections for each connection. Connecting power cable is 4/0 copper, diesel locomotive type; with 1 cable per positive and negative pole. Contractor to provide a ground conductor for battery rack sized at 2/0 AWG; bare copper. All existing alarm wiring to the existing battery charger shall be reconnected by contractor.

4.3.5.6. Interjar connectors supplied shall in no way affect installation of the flame arrester vents provided with the cells.

4.4. Accessories. Furnish and ship with each battery, any and all accessories essential for proper installation, operation and maintenance. Accessories include the following:

4.4.1. Portable hydrometer syringe.

4.4.2. Thermometer.

4.4.3. Cell numbers from "1" to highest cell number for each battery cell, and positive (+) and negative (-) sign labels, with provision for permanent field mounting on cell jars or racks. Seller shall also provide battery rack number labels. The cell and battery rack number labels shall be corrosion resistant.

4.4.4. Protective grease such as "No-Ox-Id" by Sanchem, Inc. or manufacturer-recommended alternate for connections.

4.4.5. Touch-up paint for battery racks.

4.4.6. Battery-post insulators to cover all battery post and intercell connectors. Covers shall be made of a clear material meeting UL 94 flame-spread requirements, and shall have a LOI rating of 28% or greater.

4.4.7. Cell lifting device and spreader where cells, including multiple cell units, weigh 50 lb (22.5 kg) or more.

4.4.8. Two insulated socket wrenches for connector bolts.

4.4.9. Battery Drip Pan sized to accommodate racks without modification.

4.5. Spare parts and special tools.

4.5.1. Spare parts. Provide a list of recommended spare parts, identifying each one and the specific subassembly to which it applies. Indicate the expected life of the parts requiring replacement and the minimum recommended inventory of spare parts for installation startup, continuous operation, and maintenance. State whether the recommended spare part is a stock or special-order item, provide the name and location of the nearest supplier, and indicate approximate lead time required for delivery.

4.5.2. Spare Accessories Furnish and ship with each battery, the following:

4.5.2.1. Extra battery jars – no extra jars are required

4.5.2.2. Extra cell bolts, washers, and nuts (10%) and extra intercell straps (5%) with a minimum of two straps

4.5.3. Special tools. Furnish all special tools necessary for installation, startup, operation, maintenance, and adjustment of the equipment and of the accessories provided. Provide a list of all special tools furnished, identifying the function of each tool and the specific items for which it is used. Furnish insulated tools where required.

4.6. Surface preparation and coatings.

4.6.1. Corrosion protection. Select a coating system for the steel battery racks to provide corrosion protection during shipment, storage, and operation in the environment indicated in paragraph 4.2.1. The coating system provided shall resist the corrosive effects of the battery electrolyte, resistant to 93% sulfuric acid in immersion duty. Stainless steel, galvanized, bronze and other nonferrous surfaces will not require coating.

4.6.2. Steel treatment. Steel surfaces shall receive Seller's standard treatment prior to application of the coating system.

4.6.3. Color. Primer and top coat materials shall be by the same manufacturer. Final color shall be manufacturer's standard light gray.

4.7. Equipment marking.

4.7.1. Nameplate. Provide a corrosion-resistant nameplate with clearly legible writing for each jar, in an easily visible place. It shall provide all necessary information pertaining to the equipment but, as a minimum, include the following: manufacturer's name, type of battery cell, manufacturer's type designation, nominal electrolyte specific gravity at 77°F (25°C) and date of manufacture. Alternately, the date of manufacture may be stamped on one of the jar posts.

4.7.2. Polarity markings. For each battery cell, the positive posts shall be marked either with a positive sign (+) or letters "POS." Negative posts shall carry a negative sign (-) or the letters "NEG."

4.7.3. Seismic qualification marking. Mark each rack "Zone 2A."

4.8. Maintenance. No maintenance contract will be required.

4.9. BATTERY CHARGER

4.9.1. The charger shall automatically charge the battery supplied under these specifications. The charger shall maintain rated output voltage within ± ½ % from no load to full load with A.C. input variations of ± 5 %.

4.9.2. Battery Charger Requirements:

4.9.2.1. Ripple (maximum):10%

4.9.2.2. Float voltage range: 2.22 – 2.33 V.P.C.

4.9.3. DESIGN FEATURES

4.9.3.1. DC ammeter, 2% accuracy.

4.9.3.2. DC voltmeter, 2% accuracy.

4.9.3.3. Automatic overload protection (current limiting) to 110% of rated output, adjustable.

4.9.3.4. Charger failure alarm relay with 0 – 30 second adjustable time delay, isolated Form C output contacts and front panel mounted indication light

4.9.3.5. AC and DC circuit surge suppressors.

4.9.3.6. Manual float/equalize switch, front panel mounting.

4.9.3.7. Adjustable float/equalize levels, front panel mounted controls.

4.9.3.8. Equalize timer, 0 – 72 hours.

4.9.3.9. AC input circuit breaker, 2 pole.

4.9.3.10. DC output circuit breaker, 2 pole.

4.9.3.11. AC input pilot light.

4.9.3.12. Ground detection lights.

4.9.3.13. Ground detection alarm relay with isolated, Form C output contacts and front panel mounted indication light.

4.9.3.14. High and Low DC voltage alarm relays with isolated, Form C output contacts and front panel mounted indication lights.

4.9.3.15. AC input power failure alarm relay with 0 – 120 second adjustable time delay (accomplished via an auxiliary relay), isolated Form C contacts and front panel mounted indication light.

4.9.3.16. Reverse battery protection.

4.9.3.17. DC output blocking, prevent discharge of battery system for charger failure or loss of AC input.

4.9.3.18. Alarm output contacts shall be wired to terminal blocks suitable for termination of #12 AWG conductors. Contacts shall be rated for resistive loads of 0.5 amp at 130 VDC, minimum.

4.10. Individual Substation Requirements

4.10.1. Substation 100

4.10.1.1. Labor and Materials to remove and dispose of existing 48v dc batteries

4.10.1.2. Labor and Materials to install a temporary DC supply to the DC panel during construction.

4.10.1.3. Labor and materials to install a 48V (24 cell) C&D 3DJ-200 battery system or approved equal.

4.10.1.4. Above batteries are limited in physical size to an area of 8'Lx33"Wx30"high. For this reason a one Tier Rack C&D Rack Model RDB0800-06EP1P or approved equal is required.

4.10.1.5. Labor and materials to install a Lamarche A75DE-20-48V-ABD-1-24L-46R-21P charger (or approved equivalent). This model would include an input voltage of 240Vac and an output of 48Vdc and 20Adc, communications capability, and alarm relays.

4.10.1.6. Labor and materials to install a Battery Drip Pan under new battery system.

4.10.1.7. No new Eye wash is required as the existing Eye Wash is adequate.

4.10.1.8. A ventilation system exist, however it appears to be only on a thermostat. Contractor is to provide all labor and materials to reconnect existing ventilation to work off a timer set to run four minutes per hour minimum and be wired to a fire stat to prevent ventilation in the event of a fire. Currently no timer or firestat exist.

4.10.1.9. Labor and materials to connect all new batteries to new charger and to DC Panel.

4.10.2. Substation 200

4.10.2.1. Labor and Materials to remove and dispose of existing 48v dc batteries

4.10.2.2. Labor and Materials to install a temporary DC supply to the DC panel during construction.

4.10.2.3. Labor and materials to install a 48V (24 cell) C&D 3DJ-200 battery system or approved equal.

4.10.2.4. Above batteries are limited in physical size to an area of 93"Lx31"Wx39"high. For this reason a one Tier Rack C&D Rack Model RDB0800-06EP1P or approved equal is required.

4.10.2.5. Labor and materials to install a Lamarche A75DE-20-48V-ABD-1-24L-46R-21P charger (or approved equivalent). This model would include an input voltage of 240Vac and an output of 48Vdc and 20Adc, communications capability, and alarm relays.

4.10.2.6. Labor and materials to install a Battery Drip Pan under new battery system.

4.10.2.7. No new Eye wash is required as the existing Eye Wash is adequate.

4.10.2.8. A ventilation system exist, however it appears to be only on a thermostat. Contractor is to provide all labor and materials to reconnect existing ventilation to work off a timer set to run four minutes per hour minimum

and be wired to a fire stat to prevent ventilation in the event of a fire. Currently no firestat exist.

4.10.2.9. Labor and materials to connect all new batteries to new charger and to DC Panel.

4.10.3. Substation 300

4.10.3.1. Labor and Materials to remove and dispose of existing 48v dc batteries

4.10.3.2. Labor and Materials to install a temporary DC supply to the DC panel during construction.

4.10.3.3. Labor and materials to install a 48V (24 cell) C&D 3DJ-200 battery system or approved equal.

4.10.3.4. Above batteries are limited in physical size to an area of 65"'Lx28"Wx32"high. For this reason a one Tier Rack C&D Rack Model RDB0800-06EP1P or approved equal is required.

4.10.3.5. Labor and materials to install a Lamarche A75DE-20-48V-ABD-1-24L-46R-21P charger (or approved equivalent). This model would include an input voltage of 240Vac and an output of 48Vdc and 20Adc, communications capability, and alarm relays.

4.10.3.6. Labor and materials to install a Battery Drip Pan under new battery system.

4.10.3.7. No new Eye wash is required as the existing Eye Wash is adequate.

4.10.3.8. A ventilation system exist, however it appears to be only on a thermostat. Contractor is to provide all labor and materials to reconnect existing ventilation to work off a timer set to run four minutes per hour minimum and be wired to a fire stat to prevent ventilation in the event of a fire. Currently no timer or firestat exist.

4.10.3.9. Labor and materials to connect all new batteries to new charger and to DC Panel.

4.10.4. Substation 400

4.10.4.1. Labor and Materials to remove and dispose of existing 48v dc batteries

4.10.4.2. Labor and Materials to install a temporary DC supply to the DC panel during construction.

4.10.4.3. Labor and materials to install a 48V (24 cell) C&D 3DJ-200 battery system or approved equal.

4.10.4.4. Above batteries are limited in physical size to an area of 10'Lx36"Wx8'high. For this reason a one Tier Rack C&D Rack Model RDB0800-06EP1P or approved equal is required.

4.10.4.5. Labor and materials to install a Lamarche A75DE-20-48V-ABD-1-24L-46R-21P charger (or approved equivalent). This model would include an input voltage of 240Vac and an output of 48Vdc and 20Adc, communications capability, and alarm relays.

4.10.4.6. Labor and materials to install a Battery Drip Pan under new battery system.

4.10.4.7. No new Eye wash is required as the existing Eye Wash is adequate.

4.10.4.8. A ventilation system exist, however it appears to be only on a thermostat. Contractor is to provide all labor and materials to reconnect existing

ventilation to work off a timer set to run four minutes per hour minimum and be wired to a fire stat to prevent ventilation in the event of a fire. Currently no timer or firestat exist.

4.10.4.9. Labor and materials to connect all new batteries to new charger and to DC Panel.

4.10.5. Substation 500

4.10.5.1. Labor and Materials to remove and dispose of existing 48v dc batteries

4.10.5.2. Labor and Materials to install a temporary DC supply to the DC panel during construction.

4.10.5.3. Labor and materials to install a 48V (24 cell) C&D 3DJ-200 battery system or approved equal.

4.10.5.4. Above batteries are limited in physical size to an area of 8'Lx28"Wx36"high. For this reason a one Tier Rack C&D Rack Model RDB0800-06EP1P or approved equal is required.

4.10.5.5. Labor and materials to install a Lamarche A75DE-20-48V-ABD-1-24L-46R-21P charger (or approved equivalent). This model would include an input voltage of 240Vac and an output of 48Vdc and 20Adc, communications capability, and alarm relays.

4.10.5.6. Labor and materials to install a Battery Drip Pan under new battery system.

4.10.5.7. No new Eye wash is required as the existing Eye Wash is adequate.

4.10.5.8. A ventilation system exist, however it appears to be only on a thermostat. Contractor is to provide all labor and materials to reconnect existing ventilation to work off a timer set to run four minutes per hour minimum and be wired to a fire stat to prevent ventilation in the event of a fire. Currently no timer or firestat exist.

4.10.5.9. Labor and materials to connect all new batteries to new charger and to DC Panel.

4.10.6. Substation 600

4.10.6.1. Labor and Materials to remove and dispose of existing 125v dc batteries

4.10.6.2. Labor and Materials to install a temporary DC supply to the DC panel during construction.

4.10.6.3. Labor and materials to install a 125V (60 cell) C&D 3DJ-200 battery system or approved equal.

4.10.6.4. Above batteries are limited in physical size to an area of 10'Lx40"Wx8'high. For this reason a Two Tier Rack C&D Rack Model RDB0801-7.3EP1P or approved equal is required.

4.10.6.5. Labor and materials to install a Lamarche A75DE-20-125V-ABD-1-60L-46R-21P charger (or approved equivalent). This model would include an input voltage of 240Vac and an output of 125Vdc and 20Adc, communications capability, and alarm relays.

4.10.6.6. Labor and materials to install a Battery Drip Pan under new battery system.

4.10.6.7. No new Eye wash is required as the existing Eye Wash is adequate.

4.10.6.8. No ventilation fan exist, however there are louvers. Contractor is to provide all labor and materials to install a 200cfm minimum ventilation

fan to work off a timer set to run five minutes per hour minimum and be wired to a fire stat to prevent ventilation in the event of a fire. Currently no timer or firestat exist.

4.10.6.9. Labor and materials to connect all new batteries to new charger and to DC Panel.

4.10.6.10. Contractor to ensure the battery room door is operational and remains closed during normal operations.

4.10.6.11. Contractor to add a ventilation duct from existing HVAC to Battery Room.

4.10.7. Substation 700

4.10.7.1. Labor and Materials to remove and dispose of existing 48v dc batteries

4.10.7.2. Labor and Materials to install a temporary DC supply to the DC panel during construction.

4.10.7.3. Labor and materials to install a 48V (24 cell) C&D 3DJ-200 battery system or approved equal.

4.10.7.4. Above batteries are limited in physical size to an area of 6'Lx24"Wx36"high. For this reason a one Tier Rack C&D Rack Model RDB0800-06EP1P or approved equal is required.

4.10.7.5. Labor and materials to install a Lamarche A75DE-20-48V-ABD-1-24L-46R-21P charger (or approved equivalent). This model would include an input voltage of 240Vac and an output of 48Vdc and 20Adc, communications capability, and alarm relays.

4.10.7.6. Labor and materials to install a Battery Drip Pan under new battery system.

4.10.7.7. No new Eye wash is required as the existing Eye Wash is adequate.

4.10.7.8. A ventilation system exist, and appears to be on a timer. Contractor is to provide all labor and materials to reconnect existing ventilation to work off a timer set to run two minutes per hour minimum and be wired to a fire stat to prevent ventilation in the event of a fire. Currently no timer or firestat exist.

4.10.7.9. Labor and materials to connect all new batteries to new charger and to DC Panel.

4.10.8. Substation 800

4.10.8.1. Labor and Materials to remove and dispose of existing 125v dc batteries

4.10.8.2. Labor and Materials to install a temporary DC supply to the DC panel during construction.

4.10.8.3. Labor and materials to install a 125V (60 cell) C&D 3DJ-200 battery system or approved equal.

4.10.8.4. Above batteries are limited in physical size to an area of 11.5'Lx42"Wx36'high. For this reason Two (2) one Tier C&D Racks Model RDB0800-08EP1P mounted side by side, or a C&D modified Two Step Rack to allow for a shorter second row battery is required.

4.10.8.5. Labor and materials to install a Lamarche A75DE-20-125V-ABD-1-60L-46R-21P charger (or approved equivalent). This model would include an

input voltage of 240Vac and an output of 125Vdc and 20Adc, communications capability, and alarm relays.

4.10.8.6. Labor and materials to install a Battery Drip Pan under new battery system.

4.10.8.7. No Eye wash exist. Provide labor and material install a simple single bottle eye wash station.

4.10.8.8. A ventilation system exist, however it appears to be only on a thermostat. Contractor is to provide all labor and materials to reconnect existing ventilation to work off a timer set to run ten minutes per hour minimum and be wired to a fire stat to prevent ventilation in the event of a fire. Currently no timer or firestat exist.

4.10.8.9. Labor and materials to connect all new batteries to new charger and to DC Panel.

4.10.9. Substation 900

4.10.9.1. Labor and Materials to remove and dispose of existing 125v dc batteries

4.10.9.2. Labor and Materials to install a temporary DC supply to the DC panel during construction.

4.10.9.3. Labor and materials to install a 125V (60 cell) C&D 3DJ-200 battery system or approved equal.

4.10.9.4. Above batteries are limited in physical size to an area of 11'Lx42"Wx36'high. For this reason Two (2) one Tier C&D Racks Model RDB0800-08EP1P mounted side by side, or a C&D modified Two Step Rack to allow for a shorter second row battery is required.

4.10.9.5. Labor and materials to install a Lamarche A75DE-20-125V-ABD-1-60L-46R-21P charger (or approved equivalent). This model would include an input voltage of 240Vac and an output of 125Vdc and 20Adc, communications capability, and alarm relays.

4.10.9.6. Labor and materials to install a Battery Drip Pan under new battery system.

4.10.9.7. No new Eye wash is required as the existing Eye Wash is adequate.

4.10.9.8. A ventilation system exist and no alterations should be necessary.

4.10.9.9. Labor and materials to connect all new batteries to new charger and to DC Panel.

5. DOCUMENTATION

5.1. General.

5.1.1. Submit the drawings and data required by the specification and/or listed in paragraph 6.2 within the time specified for Owner's review.

5.1.2. The Owner's general review of drawings and data or waiver of same shall in no event relieve Seller of any responsibility to meet all requirements of this specification or the purchase order.

5.2. Drawings and data. Submit the following for Owner review:

5.2.1. Drawings showing batteries, interconnections, rack outlines, dimensions required for mounting, weight of racks and filled cells, and description of rack finish for each battery system

5.2.2. Cell outline including connector and battery terminal details, electrolyte levels, weight of assembled cell, separate weights of electrolyte, plates, and jar.

5.2.3. Seismic rack design and certification (see paragraph 5.2.7)

5.2.4. Type, catalog designation, and description of major components provided by Seller. Longest recommended storage time when batteries are shipped charged, and dry-charged; and Seller's storage and freshening charge recommendations. Field test recommendations, including performance tests

5.2.5. Test reports for factory tests, including capacity tests

5.3. Instruction and maintenance manuals. Provide in the manner, number of copies, and within the time limits, as set forth in the purchase order, instruction manuals in accordance with the Owner's requirements. One copy of the instructions applicable to each component or group of components, if there are no differences, shall be shipped with the component(s).

6. QUALITY ASSURANCE

6.1. General. Seller shall have methods to assure that items and services, including subcontracted items and services, comply with this specification.

6.2. Owner surveillance. Manufacturing, processing, testing and inspection operations affecting the equipment or material shall be subject to surveillance by the Owner.

6.3. Fabrication sequence. Prior to production, submit a fabrication sequence describing inspection and/or tests to be performed, for use in determining inspection points which the Owner may desire to witness. The Owner will advise Seller, prior to production, of those fabrication steps and shop inspection points that the Owner desires to witness. Seller shall give the Owner adequate notice, at least 5 working days, prior to those fabrication steps and tests which the Owner desires to witness.

6.4. Deviations. All deviations to this specification shall be documented and referred to the Owner for disposition.

6.5. QA documentation. Provide the following quality assurance (QA) documents for the Owner's records:

6.5.1. Certificate of compliance, stating the following: "All work provided by Seller under this specification complies with all requirements of this specification and Owner-accepted deviations."

6.5.2. Documents identifying deviations and their acceptance.

7. INSPECTION AND TESTING

7.1. General.

7.1.1. Purpose of tests. Factory and field tests shall be conducted to determine the materials and work are free from defects, and to establish design and construction meet the requirements of this specification and the purchase order. Owner acceptance of the equipment shall not relieve the Seller of responsibility for meeting all the requirements of this specification.

7.1.2. Expense of testing. The cost of equipment, instruments, tools, personnel and other expenses incidental to the tests, including replacement of damaged materials and subsequent retests, shall be borne by Seller. This does not include Owner's expense in witnessing the tests.

7.1.3. Failed tests. If the battery system or any part of it fails to meet the specified performance guarantees, correct/rework or replace the part which fails, as mutually agreed with the Owner.

7.1.4. Tests results. Submit test results for Owner review.

7.2. Shop tests.

7.2.1. Pilot cell. Designate a pilot cell on the basis of the test results for each battery system's permanent record. With the battery shipped wet, it shall be the cell with the lowest specific gravity after the battery is charged.

7.2.2. Production tests. Perform the following production tests at the factory:

7.2.2.1. Cell voltage measurement. The tolerance shall be ± 40 mV from a nominal 2.25 V/cell.

7.2.2.2. Electrolyte gravity measurement. The tolerance shall be ± 10 specific gravity points from a nominal 1.250 specific gravity.

7.2.2.3. Pressure-relief vent operation and reseal. Shall pass manufacturer's standard test.

7.2.2.4. Cell-jar leakage test. The cell shall be pressurized with air and the pressure shall remain constant.

7.3. Field tests. The Owner will perform a battery performance test in accordance with IEEE 450 on the fully-assembled batteries at the job site. The test will be based on the battery manufacturer's ampere-hour rating of the battery.

8. PREPARATION FOR DELIVERY

8.1. Cleanliness. At the time of shipment, the equipment shall be clean inside and outside. Remove all rust, oil, grease (except corrosion-inhibiting compound on cell posts), chalk, crayon, and paint marks, and other deleterious material from all surfaces of the equipment. Touch up any cuts, nicks, or scratches to the coating system.

8.2. Preparation for shipping and storage.

8.2.1. Prepare equipment for shipment to protect it from damage during shipment and subsequent storage.

8.2.2. Protect all openings to prevent damage, corrosion, and entrance of foreign matter during shipment and storage.

8.2.3. Adequately support equipment for shipment. Crate or box loose parts for shipment, appropriately identified.

8.2.4. Label and number packaging so that each section or assembly may be identified before being uncrated. Mark each package as to the substation number (100-900) as required.

8.2.5. Ship each cell wet and charged, and filled with electrolyte. Batteries that are shipped charged shall be suitable for storage for a period of at least three months without the need for charging.

8.2.6. The Owner will not provide a storage environment other than the final installation location.

8.2.7. Shipping Addresses are as follows:

8.2.7.1. Sub 100, 2191 Oak Ridge Turnpike, Oak Ridge TN 37830

8.2.7.2. Sub 200, 1613 Oak Ridge Turnpike, Oak Ridge TN 37830

8.2.7.3. Sub 300, 480 Oak Ridge Turnpike, Oak Ridge TN 37830

8.2.7.4. Sub 400, 195 Lafayette Drive, TN 37830

8.2.7.5. Sub 500, 115 Valley Court, Oak Ridge TN 37830

8.2.7.6. Sub 600, 260 Wilberforce Avenue, Oak Ridge TN 37830

8.2.7.7. Sub 700, 700 Bear Creek Road, Oak Ridge TN 37830

8.2.7.8. Sub 800, 112 Union Valley Road, Oak Ridge TN 37830

8.2.7.9. Sub 900, 1523 Blair Road, Oak Ridge TN 37830

4. APPENDIX A CONTRACT DOCUMENTS

LABOR & MATERIALS CONTRACT

THIS AGREEMENT, made and entered into this _____ day of _____ in the year Two Thousand and Fifteen (2015), by and between the City of Oak Ridge hereinafter called the Owner, whose office is located at 100 Woodbury Lane, P.O. Box 1, Oak Ridge, Tennessee 37831-0001 and whose office is located at _____ hereinafter called the Contractor, and sometimes referred to as though it were an individual,

WITNESSETH that the parties to these presents, each in consideration of the undertakings, promises and agreements on the part of the other herein contained, have undertaken, promised and agreed, and do hereby undertake, promise and agree, the Owner for itself, its successors and assigns, and the Contractor for himself, his successors and assigns, as follows:

FIRST - The Contractor agrees, at his own sole cost and expense, to perform all the work, including providing management, information and reports, labor, materials, construction facilities, tools and equipment, and services, except the specific materials and services to be provided by the Owner or by others, necessary to complete and to complete in a good, substantial, workmanlike and approved manner within the time hereinafter specified and in accordance with terms, conditions and provisions of this Contract, and of the instructions, orders and directions of the Owner made in accordance with this Contract, the Labor & Materials for system wide Substation Battery Upgrade Project for the City of Oak Ridge, Oak Ridge, Tennessee. The above work is more completely described in the Proposal, General Conditions, Special Conditions , Substation Materials, all of the Technical Specifications, and the Drawings which are part hereof.

SECOND - The Owner agrees to furnish to the Contractor only the materials listed in Proposal.

THIRD - The Contractor agrees to begin work within 30 calendar days from the date of receipt of a "Notice to Proceed" and to ensure the completion of the work hereunder on or before September 1, 2015. Since time is of the essence of this Contract and compliance with this schedule is necessary for the complete success of the work, the Contractor agrees to take all precautions in preparation and management which may be necessary to ensure completion in time, as required by this Contract. The Contractor agrees to pay liquidated damages of $500 per day for each day after the completion date ensured above for which construction activities remain outstanding as liquidated damages.

The Contractor agrees that he will prosecute the work in accordance with the schedule provided with the proposal.

FOURTH - The Owner agrees to pay and the Contractor agrees to accept as full compensation, satisfaction, and discharge for all work performed and all materials installed, and for all costs and expenses incurred, damages sustained and for each and every matter, thing or act performed, furnished or suffered in accordance with the terms, conditions and provisions thereof, and of the instructions, orders and directions of the Owner thereunder, except changes or additions covered by Change Orders, which shall be paid for as provided in the General Conditions, a lump sum equal to:

Total Contract Dollars		dollars ($	)
Authorized Contract Amendments	minus	dollars ($	20,000)
Amount to Contractor		dollars ($	)

FIFTH - All the provisions contained in this Agreement, Insurance Requirements, General Conditions, Supplemental General Conditions, Special Conditions, Scope of Work, Technical Specifications, Drawings, and those items included by reference shall be deemed terms and conditions of the Contract as if fully embodied herein.

These Contract documents are complementary, and what is called for by any of them shall be as binding as if called for by all.

SIXTH - Without limiting any of the other obligations or liabilities of the Contractor, the Contractor shall adhere to the instructions and provide and maintain performance bonding and also insurance in accordance with the provisions set forth in the Insurance Requirements until the work is completed and accepted by the Owner.

The Contractor shall, before commencing work on this Contract, deliver to the Owner three copies of Certificates of Insurance and bonding, completed by his insurance carrier or agent certifying that minimum insurance coverage as required are in effect. Certificates shall indicate Contractor's name, Substation System Battery Project and the Contract Number. Duplicate copies of insurance policies shall be furnished to the Owner within ten (10) days after the execution of the Contract when so requested by the Owner. The same procedure shall be followed for subcontractors.

SEVENTH - The Contractor intends to subcontract specific portions of the work to the following subcontractors:

Description	Subcontractors' Names and Addresses

EIGHTH - This Contract, and attachments thereto, represents the entire and integrated agreement between the parties hereto and supersedes all prior and contemporaneous negotiations, representations and agreements, whether written or oral, with respect to the subject hereof. This Contract may be amended only by written instrument signed by both Owner and Contractor.

IN WITNESS WHEREOF, the parties hereto have duly executed this Agreement the day and year first above written.

City of Oak Ridge:

By:

_____

Name: _____

Title: Mayor

Witness:

Name: _____

_____

_____

Approved as to form and legality:

_____
(City Attorney)

Contractor:
By:

_____
(Contractor)

Name: _____

Title: _____

Witness:

Name: _____

PERFORMANCE BOND

KNOW ALL MEN BY THESE PRESENTS: that

_____
(Name of Contractor)

_____
(Address of Contractor)

a _____, hereinafter called Principal, and
(Corporation, Partnership, or Individual)

_____
(Name of Surety)

_____
(Address of Surety)

hereinafter called Surety, are held and firmly bound unto

City of Oak Ridge, Tennessee
(Name of Owner)

100 Woodbury Lane, Oak Ridge, TN 37831
(Address of Owner)

hereinafter called OWNER, in the penal sum of

_____Dollars, ($_____)

in lawful money of the United States, for the payment of which sum well and truly to be made, we bind ourselves, successors, and assigns, jointly and severally, firmly by these presents.

THE CONDITION OF THIS OBLIGATION is such that whereas, the Principal entered into a certain contract with the OWNER, dated the _____ day of _____, 2015, a copy of which is hereto attached and made a part hereof for the construction of:

System Wide Substation Battery Upgrade

NOW THEREFORE, if the Principal shall well, truly and faithfully perform its duties, all the undertakings, covenants, terms, conditions, and agreements of said contract during the original term thereof, and any extensions thereof which may be granted by the OWNER, with or without notice to the Surety and during the one year guaranty period, and if he shall satisfy all claims and demands incurred under such contract, and shall fully indemnify and save harmless the OWNER from all costs and damages which it may suffer by reason of failure to do so, and shall reimburse and repay the OWNER all outlay and expense which the OWNER may incur in making good any default, then this obligation shall be void; otherwise to remain in full force and effect.

PROVIDED FURTHER, that the said surety, for value received hereby stipulates and agrees that no change, extension of time, alteration or addition to the terms of the contract or to the WORK to be performed there nder or the SPECIFICATIONS accompanying the same shall in any way affect its obligation on this BOND, and it does hereby waive notice of any such change, extension of time, alteration or addition to the terms of the contract or to the WORK or to the SPECIFICATIONS.

PROVIDED, FURTHER, that no final settlement between the OWNER and the CONTRACTOR shall abridge the right of any beneficiary hereunder, whose claim may be unsatisfied.

IN WITNESS WHEREOF, this instrument is executed in _____ counterparts, each one of which shall be deemed an original, this the _____ day of _____ 2015.

ATTEST:

_____ Principal Secretary

By _____ Principal(s)

(SEAL)

_____ (Witness as to Principal)

_____ (Address)

_____ (Address)

_____ Surety

ATTEST:

_____ Surety Secretary

(SEAL)

_____ (Witness as to Surety)

By _____ Attorney-in-Fact

_____ (Address)

_____ (Address)

NOTE: Date of BOND must not be prior to date of Contract.
If CONTRACTOR is Partnership, all partners should execute BOND.

IMPORTANT: Surety companies executing BONDS must appear on the Treasury Department's most current list (Circular 570 as amended) and must be authorized to transact business in the state where the PROJECT is located.

PAYMENT BOND

KNOW ALL MEN BY THESE PRESENTS: that

_____
(Name of Contractor)

_____
(Address of Contractor)

a _____, hereinafter called Principal,
(Corporation, Partnership, or Individual)
and

_____
(Name of Surety)

_____
(Address of Surety)

hereinafter called Surety, are held and firmly bound unto

City of Oak Ridge
(Name of Owner)

100 Woodbury Lane Oak Ridge, TN 37831
(Address of Owner)

hereinafter called OWNER, in the penal sum of
_____Dollars, ($_____)

in lawful money of the United States, for the payment of which sum well and truly to be made, we bind ourselves, successors, and assigns, jointly and severally, firmly by these presents.

THE CONDITION OF THIS OBLIGATION is such that whereas, the Principal entered into a certain contract with the OWNER, dated the _____ day of , 2015 a copy of which is hereto attached and made a part hereof for the construction of: System Substation Batteries Upgrade

NOW THEREFORE, if the Principal shall promptly make payments to all persons, firms, SUBCONTRACTORS, and corporations furnishing materials for or performing labor in the prosecution of the WORK provided for in such contract, and any authorized extension or modification thereof, including all amounts due for materials, lubricants, oil, gasoline, coal and coke, repairs on machinery, equipment and tools, consumed or used in connection with the construction of such WORK, and all insurance premiums on said WORK, and for all labor, performed in such WORK whether by SUBCONTRACTOR or otherwise, then this obligation shall be void; otherwise to remain in full force and effect.

PROVIDED FURTHER, that the said surety, for value received hereby stipulates and agrees that no change, extension of time, alteration or addition to the terms of the contract or to the WORK to be performed thereunder or the SPECIFICATIONS accompanying the same shall in any way affect its obligation on this BOND, and it does hereby waive notice of any such change, extension of time, alteration or addition to the terms of the contract or to the WORK or to the SPECIFICATIONS.

PROVIDED, FURTHER, that no final settlement between the OWNER and the CONTRACTOR shall abridge the right of any beneficiary hereunder, whose claim may be unsatisfied.

IN WITNESS WHEREOF, this instrument is executed in _____ counterparts, each
(Number)
one of which shall be deemed an original, this the _____ day of 2015.

ATTEST:

_____
Principal

_____
(Principal) Secretary

By _____(s)
Principal Secretary

(SEAL)

_____
(Address)

_____

_____
(Witness as to Principal)

_____
(Address)

_____

_____
Surety

ATTEST:

By _____
Attorney-in-Fact

_____
(Witness as to Surety)

_____
Address

_____
(Address)

_____

_____

NOTE: Date of BOND must not be prior to date of Contract.
If CONTRACTOR is Partnership, all partners should execute BOND.

IMPORTANT: Surety companies executing BONDS must appear on the Treasury Department's most current list (Circular 570 as amended) and must be authorized to transact business in the state where the PROJECT is located.

WAIVER AND RELEASE OF LIEN

WHEREAS, the undersigned_____
(Name of Manufacturer, Materialman, or Subcontractor)

has furnished to _____ material for
(Name of Contractor)

use in the construction _System Substation Batteries Upgrade_____ Project

belonging to __City of Oak Ridge, TN_____.

NOW THEREFORE, the undersigned
for and in consideration of $1.00 and other good and valuable consideration, the receipt of which is hereby acknowledge, does hereby waive and release any and all liens, or right to claim or lien, on the above described Project and premises, under any law, common or statutory, on account of labor or material, or both, heretofore or hereafter furnished by the undersigned to or for the account of said
_____ for said project.
(Name of Contractor)

Given under my (our) hand(s) and seal this _____ day of _____, 2015

By_____

State of _____County of_____

I, _____, a notary public, in and for said State and County, hereby certify

that _____ whose name as

_____ of _____
(Title or Office) (Name of Manufacturer, Materialman, or Subcontractor)

is signed to the foregoing and who is known to me, acknowledged before me on this day that he, with full authority, executed the foregoing instrument voluntarily for and as the act of said

_____
(Name of Manufacturer, Materialman, or Subcontractor)

Given under my hand and seal this _____ day of _____, 20_____

_____
Notary Public

My commission expires_____

RELEASE FROM CONTRACTOR

KNOWN ALL MEN BY THESE PRESENTS THAT _____ a corporation of the state of _____, whose address is _____ , hereinafter called "Contractor", in consideration of the sum of Ten Dollars ($10.00) and other good and valuable considerations, the receipt of which is hereby acknowledged, does hereby release and forever discharge the City of Oak Ridge, a municipality organized under the laws of the State of Tennessee, whose address is City of Oak Ridge, P.O. Box 1, 200 S. Tulane Avenue, Oak Ridge, Tennessee 37831, hereinafter called the "Owner", and its Engineer, Mesa Associates, a corporation organized under the laws of the State of Alabama, whose address is 10604 Murdock Road, Knoxville, Tennessee 37932, hereinafter called the "Engineer", their successors and assigns of and from any and all actions, causes of actions, debts, dues, accounts, covenants, agreements, judgments, claims and demands of whatsoever nature or character which said Contractor now has or ever has had against either of them, their successors and assigns, including, but not limited to, any actions, causes of actions, debts, dues, accounts, covenants, agreements, judgments, claims and demands which shall or may arise out of, or be incidental to work undertaken or performed under and/or pursuant to that certain Contract entered into by and between Contractor and Owner on the day of _____2015, as amended and supplemented for performance of related work for System Substation Batteries Upgrade Project for the City of Oak Ridge, Tennessee.

The Contractor hereby represents and warrants that all bills for labor, materials, lands, licenses and other expenses for which the Owner and/or the Engineer might be sued or for which a lien might be filed have been fully satisfied and paid; and hereby acknowledges receipt of the final payment under said Contract, and in consideration thereof, pursuant to and in accordance with the provisions of said Contract, said Contractor hereby covenants and agrees, for himself, his successors and assigns, that he and they, and each of them, shall and will defend and save harmless the Owner and Engineer from and against any and all suits, actions, claims, liens, or demands of laborers, mechanics, materialmen or others, or arising out of injury or damage to persons or property, which in any way may arise out of, or be incidental to, work undertaken or performed under and /or pursuant to said Contract.

IN WITNESS WHEREOF the said Contractor has caused these presents to be duly executed this _____ day of _____, 20__.

BY_____

_____
Title

ATTEST

_____
Secretary

STATE OF _____)
:
COUNTY OF _____)

On the _____ day of _____, 20__, before me personally came to me known, who, being by me duly sworn, did depose and say that he resides in ; that he is duly authorized to execute the foregoing instrument and that the foregoing instrument was duly executed by him.

GIVEN UNDER MY HAND AND SEAL OF OFFICE THIS _____ day of , 20__.

GENERAL CONDITIONS

1.0 DEFINITIONS

A. The words and terms specified in this Subsection, or pronouns used in their stead, shall, for the purposes of this Contract, have the meanings as given below:

1. The word "Owner" shall mean City of Oak Ridge, Tennessee or its authorized representatives, successors, and assigns.

2. The word "Engineer" shall mean the Owner's Engineer, Mesa Associates, Inc., or its authorized representatives, successors, and assigns.

3. The word "Contractor" shall mean the person, persons, partnership, company, or corporation undertaking the performance of the work required by this Contract.

4. The word "Contract" shall mean, collectively, all the covenants, terms and stipulations contained in the various portions of this Contract, (the Contract documents), that is: the Agreement, the Insurance Requirements, the General Conditions, the Special Conditions, the Summary of Work, the Technical Specifications, and the Drawings.

5. The words "Technical Specifications" shall mean, collectively, all the technical specifications and attachments listed in the Contract, copies of which are in the possession of the Owner and the Contractor, and also such supplementary specifications as the Owner may issue from time to time in order to elucidate or to explain details which are not already specified.

6. The word "Drawings" shall mean, collectively, all the drawings, sketches, and standards listed in the Contract, copies of which are in the possession of the Owner and the Contractor, and also such supplementary documents as the Owner may issue to the Contractor from time to time in order to elucidate said Drawings or to show details which are not shown thereon.

7. The words "Approved" or "Approved as Noted" shall mean, in the case where the Contractor is required to submit drawings or other documents for approval, that the drawings or documents have been reviewed for general conformity to the Contract requirements and are satisfactory or satisfactory as noted. The Contractor in both cases shall retain responsibility for meeting all Contract requirements.

8. The words "Contract Price" shall mean either the lump sum named in the Agreement, or the approximate total of all payments as estimated from the unit prices and/or lump sums set forth in the Schedule of Prices of the Agreement, which are to be paid to the Contractor for the work to be performed under this Contract.

9. The word "day(s)" shall mean calendar day(s).

10. The word "Elevation" (or an abbreviation of it) shall mean the elevation relative to United States Geological Survey Sea Level Datum, as represented by various bench marks in the vicinity of the work, or they shall mean the elevation relative to the arbitrary datum plane fixed by the Engineer for the particular work.

11. Wherever the word "Manufacturer" is used, it refers to a person or corporation who is furnishing material or equipment to either the Owner or the Contractor, or both.

12. Wherever the words "or Equal" are used in connection with materials, products, processes or equipment designated by manufacturer's or vendors' names, trade names, catalog numbers, etc., they are intended to establish a standard. Other materials, products, processes or equipment meeting the established standard may be used provided that their equivalency has been demonstrated to the satisfaction of the Engineer and that the Engineer's written acceptance of their use has been obtained. A minimum of thirty (30) days is required to either approve or disapprove any such request.

13. The word "work" includes labor or materials or both, equipment, tools, transportation, or other items, facilities, and services necessary to complete the Contract.

14. The words "subcontractor" or "subcontractors" as employed herein include only those contractors deriving their authority to perform work under the Contract from the Contractor, after approval by the Owner.

2.0 CONTRACT PARTS AND ENGINEER'S DECISIONS

A. The various parts of the Contract are intended to be complementary to each other, but should any discrepancy appear, or any misunderstanding arise as to the import of anything contained therein, the interpretation of the Engineer shall be final and binding. The correction of any errors or omissions in the Drawings, Technical Specifications, Scope of Work, and Special Conditions may be made by the Engineer when such correction is necessary to bring out clearly the intention which is indicated by a reasonable interpretation of the Drawings, Technical Specifications, Scope of Work, and Special Conditions as a whole.

B. The written decision provided by the Engineer as to the true construction and meaning of the Drawings and Technical Specifications shall be binding upon the Contractor.

C. Whenever, in the Technical Specifications or on the Drawings which are a part of this Contract or which may be furnished to the Contractor for directing his work, the terms or descriptions of various qualities of material, workmanship, structures, processes, plant, or other features of the Contract are described in general terms, the meaning or fulfillment of which must depend upon individual judgment; then in all cases the question of the fulfillment of such specifications or requirements shall be decided by the Engineer and said material shall be furnished, said work shall be performed, and said structure, process, plant or feature shall be constructed, furnished or carried on in full and complete accordance with his

interpretation of the same and to its full satisfaction and acceptance.

D. Matters shown either on the Drawings or found in the Technical Specifications shall be performed and furnished as if shown in each except where expressly excepted either in the Technical Specifications or on the Drawings. Figured dimensions shall be used in all cases. Scale measurements shall not be used. Detailed drawings consistent with general drawings shall be taken in preference to general drawings of the same part of the work.

E. It shall be the responsibility of the Contractor to notify the Owner, without delay, of any omissions, errors, or discrepancies the Contractor may discover in the Technical Specifications or the Drawings. The Contractor shall in no case proceed in uncertainty or without instructions which fully meet his need.

3.0 NO WAIVER OF OBLIGATIONS

The Engineer shall not have any power to waive any of the obligations of the Contractor under this Contract except under the terms of this Contract.

4.0 INDEPENDENT CONTRACTOR

A. Contractor shall act as an independent contractor and not as a subcontractor, agent, or employee of the Owner or the Engineer in performing the Contract.

B. Contractor represents that he is fully experienced and properly qualified to perform the class of work provided for herein, and that he is properly licensed, equipped, organized, and financed to perform such work.

C. The means and methods employed for performing the various classes of work shall be at the option of the Contractor, subject to the Contract provisions.

5.0 COLLATERAL WORK

The Contractor may be working in close proximity and, at times, in combined operations with other contractors. The Contractor shall cooperate with all other contractors, coordinate his work with theirs, and arrange his activities so as not to unduly interfere or retard progress of the work of the other contractors. The Owner will have the right to coordinate the various contractors. Differences of opinion or disputes between contractors will be decided by the Owner, but such decision shall not result in additional cost to the Owner.

6.0 WORK PERFORMED AT CONTRACTOR'S RISK

A. The Contractor shall protect the work covered by this Contract from damage by the elements or otherwise until completed and delivered hereunder.

B. All work shall be performed at the Contractor's risk, and if the work or any portion thereof shall be damaged in any way before the final completion and acceptance of the work as a whole, the Contractor shall promptly repair or replace such loss or damage without additional cost or expense to the Owner.

C. The work shall be carried on to completion without damage to any work or property of the Owner or of others and without interference with the operation of existing machinery or equipment.

D. All other work completed or in progress, that may be damaged through the execution of the work hereunder, shall be protected by the Contractor, and such protection shall remain and be maintained until its removal is directed by the Owner.

E. The Contractor shall be responsible for any loss or damage to material, tools or other articles used or held for use in connection with the work.

7.0 CONTRACTOR INFORMED AS TO CONDITIONS

A. The Contractor states that he has examined all the Contract documents and those items referenced therein and has made a field examination of the site, right-of-way, and access and that he has informed himself about the character, quality, and quantity of surface and subsurface materials and water conditions to be encountered; the quantities in the various sections of the work; weather conditions; ecological and environmental requirements; transportation; existing facilities; the character of equipment and facilities needed for the prosecution of the work; the location and suitability of all construction materials; the local labor conditions including availability and productivity; and all other matters in connection with the work and services to be performed under this Contract.

B. Any records of surface and subsurface conditions, water records or other observations which may have been made by or for the Owner may be made available to the Contractor for his information, but there is no expressed or implied guarantee as to the accuracy of the records or any interpretation of them. The Contractor states that he recognizes this and that he has formed his own opinion of all these conditions from an inspection of the site and has made his own interpretation of the records.

C. The Contractor further states that the Contract Price is based on his own knowledge and judgment of the conditions and hazards involved, and not upon any representation of the Owner or the Engineer. The Owner and the Engineer assume no responsibility for any understandings or representations made by any of their representatives during or prior to execution of the Contract, unless such understanding or representations are expressly stated in the Contract and the Contract expressly provides that the responsibility therefor is assumed by the Owner or the Engineer.

8.0 REMOVAL OF EMPLOYEES

The Owner reserves the right to refuse admittance to or request removal from its premises of any Contractor employee for violating project rules, for disruption to the project or for other reasonable causes and such refusal or request shall be complied with immediately by the Contractor and shall not constitute cause for claiming additional compensation or damages.

9.0 EMERGENCY ORDERS

When the Contractor or his authorized site representative is not present on any part of the work where it may be desired to give orders in the event of emergencies, orders may be given by the Owner and shall be received and obeyed by the supervisor or foreman of the Contractor who may have charge of the particular part of the work in reference to which orders are given. If requested to do so, the Owner will confirm such orders in writing.

10.0 SKILLED WORKERS

Attention is called to the fact that certain portions of the installation call for persons skilled not only in their trade but specialized in the particular line required. The Contractor shall provide that such work shall be performed by persons who are skilled and specialized in the work to which they are assigned and shall provide copies of applicable certifications to the Owner.

11.0 CONTRACTOR'S ADDRESS

Both the addresses appearing in the Agreement and the Contractor's office at or near the site of the work are hereby designated as places to which notices, letters or other communications to the Contractor will be mailed or delivered. The delivery at either of the above-named places, or depositing in a postpaid wrapper directed thereto in any post office box regularly maintained by the U.S. Postal Service, of any notice, letter or other communication to the Contractor shall be deemed sufficient notice or service thereof upon the Contractor, and the date of such notice of service shall be the date of such delivery or depositing. The first-named address may be changed at any time by an instrument in writing executed and acknowledged by the Contractor and delivered to the Owner. Nothing herein contained shall be deemed to preclude or render inoperative the service of any notice, letter or other communication upon the Contractor personally.

12.0 PERSONAL ATTENTION OF CONTRACTOR

The Contractor shall provide full-time, on-site management and day-to-day supervision of his craft personnel, subcontractors, suppliers, and site operations. The Contractor shall give his personal attention constantly to the faithful prosecution of the work, and shall be present either in person or by a duly authorized representative on the site of the work, continually during its progress. The Contractor's personal attention shall be interpreted to mean the attention of an officer of the company or corporation or member of the partnership.

13.0 REMOVAL OF EQUIPMENT

The Contractor shall not sell, assign, mortgage, hypothecate or remove construction or permanent equipment or materials for the work or which may be necessary for the completion of the Contract, without the written consent of the Owner.

14.0 ASSIGNMENT OF CONTRACT

The Contractor agrees that he shall not assign this Contract or any portion thereof to any person, persons, partnership, company or corporation not satisfactory to the Owner, and he shall not make such an assignment until he has received the written permission of the Owner. No such assignment, even though thus consented to, shall relieve the Contractor from his liability under this Contract for the performance and completion of the work by

the time and in the manner herein contracted for.

15.0 SUBCONTRACTS

A. If the Contractor shall cause any part of the work to be performed by a subcontractor, the provisions of this Contract shall apply to such subcontractor and his or its officers, agents or employees in all respects as if he or it and they were employees of the Contractor, and the Contractor shall not, in any manner thereby, be discharged from his obligations and liability hereunder, but shall be liable hereunder for all acts and omissions of the subcontractor, his or its officers, agents and employees, as if they were employees of the Contractor.

B. The Owner will have no responsibility for effecting payment to subcontractors or settling subcontractor claims or disputes.

C. The Contractor shall not award subcontracts for work or award work to subcontractors not listed in the Agreement without the authorization of the Owner. Should the Contractor intend to award additional subcontracts, he shall provide the Owner with a written notice including sufficient information concerning the scope of work, subcontractor's capabilities, and subcontract value.

16.0 TIME AND ORDER OF COMPLETION

A. The Contractor agrees that the work shall be commenced and carried out at such points, and in the order of precedence, and at such times and seasons as may be required to meet the schedule for the completion of the work as set forth in the Agreement.

B. The Contractor declares that he is aware of the intermittent nature of the work, has familiarized himself with the site, access, rights-of-way, climatic conditions, water, local labor, local conditions, collateral work, and with all the circumstances which may or are likely to affect the performance and completion of the work, and that he has allowed for such conditions in the work schedule.

C. Each section of work shall be started on the agreed upon schedule dates and rates of progress shall be maintained which will assure timely completion and provide adequate allowance for contingencies.

17.0 INCREASE OF WORKING FORCE AND EQUIPMENT

A. If at any time the Contractor's working force, services, equipment, and material deliveries, in the opinion of the Owner, are inadequate for securing the necessary progress or required quality of work, as herein stipulated, the Contractor shall, if so directed and at his own expense, increase or supplement the supervision, working force, equipment, and services and/or perform the work on an overtime or multiple shift basis and/or provide additional services to such an extent as to give reasonable assurance of compliance with the work schedule and the required quality of the work.

B. When so directed by the Owner, the Contractor shall submit for approval such supplementary schedules as may be necessary to demonstrate the manner in which

such compliance will be established.

C. If the Contractor does not promptly comply with such directions, the Owner may proceed under the provisions of Subsection 35.0. The failure of the Owner to make such demands shall not relieve the Contractor of his obligation to secure the quality and the rate of progress required by the Contract; and the Contractor alone shall be and remain liable and responsible for the efficiency and adequacy of his methods, materials, working force and equipment, irrespective of whether or not he makes any change as a result of any order or orders received from the Owner.

18.0 DISCONTINUANCE FOR CAUSES BEYOND THE CONTROL OF THE PARTIES

A. The Owner shall have the right to require the discontinuance of the work, in whole or part, for such time as may be necessary, should the condition of the weather or of flood or other similar contingencies make it desirable so to do, in order that the work shall be well and properly executed. Extension of time shall be granted the Contractor for discontinuance of work so required, but such extension shall not be a basis for any claim for additional compensation by the Contractor and shall not operate to release the Contractor and the Surety, if any, from any of their obligations.

B. Failure by the Owner to furnish Drawings, materials, equipment or services so as reasonably to meet the demands of the progress schedule of the work will operate to postpone the date specified for completing the affected portion of the work if such failure actually and substantially delays the Contractor's work. No claim for additional compensation will be allowed unless the Contract completion date is extended.

C. No necessity for an extension of time is anticipated, but if untoward or extraordinary circumstances should arise beyond the control of the Contractor, such as, but not restricted to, Acts of God or the public enemy, fires, floods, epidemics, government edicts, strikes, work stoppages caused by jurisdictional or other disputes, unusually severe weather, or for delays to subcontractors or suppliers due to such reasons, which in the opinion of the Owner should entitle the Contractor to a reasonable extension of time, such extension may be granted but such extension shall not be a basis for any claim for additional compensation by the Contractor, and shall not operate to release the Contractor from any of their obligations.

D. The Contractor shall notify the Owner in writing within seven (7) days of the start and finish of each circumstance under Subsection 18.0. Failure to so notify the Owner precludes the Contractor from claiming an extension of time.

19.0 PROGRESS ESTIMATES AND PAYMENTS

A. The Contractor shall determine on a monthly basis, starting at a date to be specified by the Owner, all the work performed and all the materials actually in place in the work, and prepare and submit a progress estimate and an invoice showing the value of the same on the basis of the Contract Price plus any Change Orders. From the total thus computed, a deduction for retention of 10% shall be made and from the balance there shall further be deducted all previous payments plus any amounts due

the Owner in accordance with the terms of this Contract.

B. The balance payable will be paid by the Owner to the Contractor within thirty (30) days after receipt of a progress estimate acceptable to the Owner and an invoice, as certified by the Owner.

C. No payments will be made under this Contract except as certified by the Owner under the provisions of this Section. Certification will not be made unless all Contract required reports and submittals are current.

D. Independent of the retained percentage provided for, the Owner may withhold, apply, or nullify the whole or part of any monthly statement to such extent as may be necessary to protect the Owner's interest in case it is apparent that the Contractor is about to default in the performance of his Contract or is violating any condition or term of this Contract.

E. No payment shall be construed as acceptance of defective work or improper material or as relieving the Contractor from his responsibility under the Contract.

20.0 FINAL PAYMENT

A. Whenever the work covered by this Contract has been completed, a final progress estimate shall be prepared in accordance with Subsection 19.0, showing the total amount of work performed by the Contractor and its value according to the terms of the Contract. From the total value thus arrived at, a retention of 10% shall be made and from the remainder there shall further be deducted all previous payments and all deductions made in accordance with the provisions of the Contract.

B. The remainder will be paid by the Owner to the Contractor within thirty (30) days after the date the final progress estimate and invoice is certified by the Owner. For final payment purposes, specific acceptance or specific rejection will be made by the Owner within thirty (30) days after Contractor's written notification to the Owner of completion of the work.

C. Before the Contractor will be entitled to the said retention payment, he shall satisfy the Owner that all bills for labor, material, equipment, services, lands, licenses, and other expenses for which the Owner might be sued or for which a lien might be filed, have been fully satisfied. The Contractor shall execute and file with the Owner a Release from Contractor in the form attached hereto, whereby the Contractor shall release any and all claims, actions, and liens against the Owner and the Engineer on account of this Contract, and shall agree to save harmless the Owner and the Engineer from future claims, actions, and liens.

D. Payment of the final progress estimate by the Owner shall in no way relieve the Contractor of his warranty responsibilities.

E. Payment of the final progress estimate by the Owner shall not constitute a release of any rights and remedies Owner may have against Contractor under this Contract, at common law, or otherwise.

F. Acceptance by the Contractor of the final payment on this Contract shall constitute

a waiver of all claims against the Owner or the Engineer.

G. If title to any item hereunder has not otherwise passed, then title shall pass to the Owner upon final payment of retention.

H. Final payment will not be made until a complete set of acceptable record drawings have been submitted.

21.0 PROVISIONAL ACCEPTANCE

The provisional acceptance of sections of the work for the purposes of utilization, preparing progress estimates, and the payment of money for such progress estimates shall not operate as a waiver of any portion of this Contract, and shall not be construed so as to prevent the Owner from requiring replacement of defective work that may become apparent after the said provisional acceptance, and shall not be construed in any way as the basis for a claim for extra compensation for any cause whatsoever by the Contractor.

22.0 INDEBTEDNESS AND LIENS

The Contractor agrees to furnish the Owner, from time to time during the progress of the work as requested, verified statements showing the Contractor's total outstanding indebtedness in connection with the work covered by the Contract. If during the progress of the work, the Contractor shall allow any indebtedness to accrue to subcontractors or others, and shall fail to pay or discharge same within five (5) days after demand, then the Owner may withhold any money due the Contractor until such indebtedness is paid, or apply same toward the discharge thereof.

23.0 CHANGES IN THE WORK

A. If it becomes necessary or desirable to modify this Contract in a manner not materially affecting the substance thereof, or to make changes by altering, adding to or deducting from the work, or to add correlated work not previously covered by the Contract, the Owner may, without invalidating the Contract, by an order to the Contractor in writing, order such changes to be made, and the changes shall be made accordingly, provided that in cases where such changes increase or decrease the cost of the work and payment therefore is not covered by the prices provided in the Agreement for the various items, the Contract Price shall be adjusted under a Change Order as hereinafter provided.

B. Except for minor modifications in the work not involving extra cost and not inconsistent with the purposes of the work, and except in an emergency endangering life or property, no extra work or change shall be made unless in pursuance of a written order from the Owner authorizing the extra work or change, and no claim for an addition to the Contract amount shall be valid unless so ordered.

C. If the Contractor intends to assert a claim for an equitable adjustment under this Section by reason of the receipt of a Change Order or by reason of any act or failure to act by the Owner, the Contractor shall within fifteen (15) days after occurrence, submit to the Owner a written notice and complete statement of such claim including a detailed estimate of its value. Any claims not submitted within

fifteen (15) days shall be deemed to have been waived.

D. Changes involving an increase in the work will be ordered by the Owner in the form of written "Change Orders" in which the consideration and effect on schedule will be set forth. All such additional work shall be executed under the provisions and conditions of the original Contract except as altered by Change Order. The value of any such additional work shall be determined in one or more of the following ways:

(a) By unit prices named in the Contract or subsequently agreed upon.

(b) An agreed upon lump sum. Upon notification by the Owner of a proposed change and a request for a written unit price or lump sum proposal covering the change, the Contractor shall provide a proposal within fifteen (15) days after said request. The proposal shall be provided in sufficient detail for analysis and evaluation by the Owner.

E. Written authorization from the Owner is required prior to undertaking any change order work.

F. Changes involving a decrease in the work will also be ordered by the Owner in the form of written "Change Orders" in which the decrease in the Contract Price will be set forth. The value of any such decrease in the work shall be determined by unit prices named in the Contract or subsequently agreed upon or by an agreed upon lump sum, as accepted by the Owner. No allowance shall be made for loss of anticipated profit.

24.0 INSPECTION AND RIGHT OF ACCESS

A. The Owner contemplates and the Contractor hereby agrees to a thorough, minute inspection of the work by the Owner and/or the Engineer.

B. The Contractor shall furnish access to the Owner and Engineer at all times to the work and to the jobsite premises used by the Contractor, and shall provide every reasonable facility for the purpose of inspection even to the extent of discontinuing portions of the work temporarily, or of uncovering or taking down portions of finished work. Prior to covering work, the Contractor shall notify the Owner and obtain its consent.

C. When finished work is uncovered or taken down for the purpose of inspection, the Contractor shall stand all the expense incident thereto in the event that the Owner was not notified before the work was covered or said work is found to be defective.

25.0 MATERIALS AND EQUIPMENT

A. Unless otherwise specified, all materials and equipment permanently incorporated in the work shall be new, and both workmanship and materials shall be of industrial quality. The Contractor shall, if required, furnish samples and satisfactory evidence as to source of supply and quality.

B. All materials and equipment furnished for use in the work shall be subject to shop

and field inspection and testing in accordance with standards accepted by the industry. In addition to inspection and testing which may be specified as part of the work, the Owner reserves the right to arrange for such testing and inspection of materials and equipment as it may deem necessary, but such inspection and testing shall not relieve the Contractor of his responsibility for furnishing materials and equipment complying with the Contract documents. The cost of inspection and testing not specified will be borne by the Owner in the event that the materials or equipment tested prove satisfactory. If, however, the inspection and testing prove that materials or equipment are not in accordance with the Contract documents, the entire cost of the inspection and testing as well as the replacement of the defective materials or equipment shall be borne by the Contractor.

26.0 GUARANTY

A. The Contractor warrants that all work furnished under this Contract shall be free from defects either in material or workmanship, and shall be suited in all respects both for the purposes for which it is specified hereunder and for all other uses for which it may be represented in writing by the Contractor to be suited.

B. If any defects in material or workmanship shall be discovered in work furnished under this Contract during the course of the work or within one (1) year from the date of completion of the work as a whole, the Contractor shall forthwith replace or correct such defective work, free from all expense to the Owner, including the costs associated with affected items outside the scope of the Contract, in a manner satisfactory to the Owner. If the Contractor shall fail to replace or correct any defective work after reasonable notice, the Owner may, at its option, cause such defective work to be replaced or corrected, and all costs and expenses incurred in connection therewith shall be borne by the Contractor.

C. The guaranty period for equipment, parts, or material replaced or repaired during the guaranty period due to defects in material or workmanship shall be one (1) year from the date of repair or replacement.

D. Contractor warrants without time limit that the work furnished under this Contract shall be free of defects in title and in his design.

27.0 LAYOUT AND MEASUREMENT

A. The Owner will establish a bench mark at the Project site for the Contractor's use in establishing baselines. The baseline and bench mark shall be carefully preserved by the Contractor and in case of any damage to the baseline or bench mark by the Contractor or any of his employees, they will be repaired and/or replaced at the Contractor's expense.

B. The Contractor shall utilize the baseline and bench mark to establish such other temporary baselines and bench marks adjacent to his work as he may require. The Contractor shall lay out his work and be responsible for all lines and elevations, and shall be responsible for the accuracy of all dimensions within the various sections of the work according to the figured dimensions on the Drawings.

C. When the Contractor adjoins or attaches to work by others, he shall be responsible

for determining the accuracy of the existing work prior to proceeding.

28.0 PROTECTION OF PROPERTY

A. The Contractor shall make all necessary provisions to prevent any damage or undue wear, by reason of the work performed under this Contract, to roads, railroads, land, structures, power and communications lines, pipelines or other items, or interferences with their operation or maintenance, all in a manner satisfactory to the owners thereof, and all cost incidental thereto shall be paid for by the Contractor. Any damage done by the Contractor to the roads, railroads, land, structures, power or communication lines, pipelines, or other items shall be the Contractor's responsibility and he shall repair or replace them if damaged, at his own expense, to the satisfaction of the governmental authorities or the owner thereof. Claims may be settled and paid for by the Owner and charged to the Contractor.

B. The Contractor shall, unless otherwise specifically provided for, make suitable arrangements with governmental authorities and railroads for the construction of all structures underneath or within road and railroad rights-of-way and to protect and safeguard the public using the roads and the movement of trains, from accident and/or delay all in accordance with the requirements of the owners thereof.

C. The Owner assumes no responsibility for the condition or maintenance of any road or structure that may be used by Contractor in performing the work, or in transferring men to and from the site or location of the work. No payment will be made to Contractor by Owner for any work performed in constructing, improving, repairing, or maintaining any road or structure for use in the performance of the work. Roads subject to interference by the work shall be kept open by Contractor insofar as possible. Contractor shall provide, erect, and maintain, at his own expense, effective barricades on which shall be placed acceptable warning and/or detour signs at each side of any road obstruction caused by his operations.

29.0 LANDS FOR CONSTRUCTION PURPOSES

A. The Contractor may have the use of lands for access, storage, construction facilities, and similar purposes, as assigned by the Owner. The Contractor shall confine his operation to the areas assigned and shall adequately protect the areas and adjacent areas from damage due to his operations.

B. All other lands or the use of lands necessary for the Contractor's operations or deemed desirable by him, shall be furnished by the Contractor at his cost.

30.0 WORK WEEK

A. The scheduled work week shall consist of five (5) eight (8) hour days, Monday through Friday, for a total of forty (40) hours per week unless the Contractor establishes a variant work week as an exception to the contract..

B. Unless otherwise specified or ordered by the Owner, work may be performed by night as well as by day, and night work may be required in emergencies or to complete work in progress which cannot be practically stopped, but no other night

work of any kind shall be performed without written notification to, and approval obtained from, the Owner, twenty-four (24) hours in advance.

C. Where night work is in progress, sufficient light shall be provided by the Contractor to safeguard the workers and the public, and to afford adequate facilities for properly installing and inspecting the materials.

31.0 USE OF EXPLOSIVES

A. No explosives shall be brought on site or used by the Contractor without prior written approval of the Owner.

B. Explosives shall not be used by the Contractor in a manner which might endanger personnel or disturb the stability, safety or quality of the work. Explosives shall be stored, handled, and used by the Contractor as prescribed by the laws and regulations of the United States, the state in which the work is performed, and the subdivisions thereof. Special attention shall be given to the immediate disposal of paper wrappings from explosives which are poisonous to livestock.

32.0 CLEANING UP

A. The Contractor's working and storage areas shall be cleaned daily with all trash and rubbish removed from the site.

B. At completion of each area of the work and at final completion of all work, the Contractor shall leave the site of his operations clean and free from all extraneous items, rubbish, and debris resulting from his construction operations.

C. The Contractor shall, after completion of the work, remove and satisfactorily dispose of all temporary works provided by the Contractor to the extent directed by the Owner. He shall remove all temporary facilities from the site; shall remove, grade or fill excavations and embankments made for construction purposes; shall remove all temporary material and equipment; shall remove all temporary supports and shall repair and finish all temporary attachment and connection points to be in an acceptable condition; and shall perform all work necessary to restore the area of his operations to at least as good an order and condition as at the start of work.

D. Should the Contractor fail to comply with this Section, the Owner will notify him in writing of his failure and if the Contractor's failure is not corrected within twenty-four (24) hours, the Owner will arrange for all necessary cleaning at the Contractor's expense and the cost of the clean-up will be deducted from the Contractor's monthly progress payment. Should the Contractor's failure to comply with the requirements of this Section result in a hazardous condition to safety of personnel or any portions of the plant, the Owner will immediately arrange for all necessary clean-up without regard to the twenty-four (24) hour correction period.

33.0 OWNER'S RIGHT TO STOP WORK

A. The Owner shall have the right to order the temporary discontinuance of the work under this Contract or any portion thereof when, in the opinion of the Owner, the performance by the Contractor thereof is unsatisfactory to obtain the required

results.

B. If the unsatisfactory condition is promptly corrected by the Contractor, the Owner will authorize resumption of the work. If the Contractor does not promptly correct the unsatisfactory condition, the Owner may proceed under the provisions of Subsection 36.0. Discontinuances of work by order of the Owner hereunder shall not be construed in any way as the basis for a claim for extra compensation by the Contractor.

34.0 RIGHT TO TEMPORARILY SUSPEND WORK BY THE OWNER

A. If, for any reason other than those provided for in Subsections 34.0 and 36.0, the Owner elects to temporarily suspend performance of the whole or any part of the work hereunder, the Owner may order the Contractor, in writing, to suspend the Contractor's work. In the event of any such suspension, the Owner will pay the Contractor a per diem rate for each day of suspension, such per diem rate to be established by agreement between the Contractor and the Owner at the time of suspension. The agreed rate for "stand-by" during such suspension will be borne by the Owner as extra work.

B. Orders for suspension and reinstatement of work under this Section will be issued by the Owner to the Contractor in writing. The time for completion of the work so suspended will be extended for a period equal to the time lost by reason of the suspension.

35.0 SUSPENSION OF WORK IF CONTRACT IS VIOLATED

A. If the whole or any part of the work to be performed under this Contract is abandoned by the Contractor; or if this Contract is assigned by him without the permission of the Owner; or if the work is sublet by him without the permission of the Owner; or if he is placed in bankruptcy, or if a receiver is appointed for his properties; or if he makes an assignment for the benefit of creditors; or if at any time the Owner decides that the work schedule is not being maintained; or if at any time the Contractor is violating any of the conditions or agreements of the Contract or is executing said Contract in bad faith or not in accordance with the terms thereof; the Owner may notify the Contractor to discontinue all work under the Contract by written notice to be served upon the Contractor by the Owner.

B. If within a period of time not exceeding five (5) working days after serving of such notice upon the Contractor, an arrangement, satisfactory to the Owner, has not been made by the Contractor for the continuance of the work, the Contractor shall discontinue the work and the Owner may withhold any or all monies due the Contractor.

C. If an arrangement, satisfactory to the Owner has not been made by the Contractor, then the Owner, without further notice to the Contractor, shall have the power to complete the work herein described by Contract or otherwise, as it may determine, and the Contractor agrees that the Owner shall have the right to take possession of and use any of the materials, plant, tools, equipment, supplies and property of any and every kind provided by the Contractor for the purpose of this work. The

expense of so completing the work, together with a reasonable charge for awarding and administering any resulting contracts, will be charged to the Contractor, and the expense so charged will be deducted by the Owner out of such monies as may be due or may at any time thereafter become due to the Contractor. In case such expense is more than the sum which would otherwise have been payable under the Contract, then the Contractor shall pay the amount of such excess to the Owner upon notice from the Owner of the excess so due. The Owner shall not be required to obtain the lowest figures for the work of completing the Contract, but may make such expenditures as in its sole judgment will best accomplish such completion.

36.0 OPTION OF TERMINATION BY THE OWNER

A. If, for any reason other than those provided for in Section 35.0, the Owner elects to discontinue the whole or any part of the work hereunder, the Owner may, in writing, terminate the Contractor's work under the Contract, in which event the Contractor will be entitled to payment for the work performed up to the time of such cancellation by multiplying the quantities of completed work by the unit prices contained herein or if a lump sum, by an amount proportional to the lump sum, in the ratio which the work actually completed bears to the entire work, as determined and agreed to by the Owner and the Contractor.

B. In the event of such termination, the Contractor further will be reimbursed by the Owner for such expenditures as in the sole judgement of the Owner are incurred by the Contractor, such as in preparing for and moving equipment to and from the work, and which are not otherwise compensated for; the intent being that an equitable settlement will be made with the Contractor under such circumstances.

37.0 INDEMNIFICATION

A. The Contractor, at his own expense, shall protect, defend, indemnify and hold harmless the Owner, the Engineer and their respective parent corporations, subsidiaries, affiliates, and their respective officers, directors, employees, and agents, from and against any and all claims, demands, causes of action, suits, other litigation, damages, liability, loss or deficiency (including attorneys' fees and other costs and expenses incident to any claim, suit, action or proceeding) (hereinafter collectively and separately referred to in this Section as "Claim") whether in favor of a third party or otherwise, arising out of or resulting from, wholly or in part, any alleged act or omission of the Contractor, any subcontractor at any tier, anyone directly or indirectly employed by any and/or each of them (including, without limitation, employees, servants and agents of any and/or each of them), or anyone for whose acts or omissions any of them may be liable, in connection with or incidental to the performance of this Contract, regardless whether or not the Claim is caused in part by a party indemnified hereunder.

B. In the event that any employees of the Owner or the Engineer are used by the Contractor, such employees while so used, shall be considered, for all purposes, including, without limitation, those of this Section, as employees, servants and agents of the Contractor and not of the Owner or the Engineer, irrespective of which party pays them.

C. In any Claim against the Owner or the Engineer, or any of their agents or employees by any employee, servant or agent of the Contractor, any subcontractor at any tier, anyone directly or indirectly employed by any and/or each of them, or anyone for whose acts any of them may be liable, the obligations of the Contractor under this Section shall not be limited, in any way, by any limitation on the amount or type of damages, compensation or other benefits payable by or for the Contractor or any subcontractor under Workers' Compensation Acts, disability benefit acts, or other employee benefit acts.

D. If the Contractor shall fail to contest and resist any Claim for which he is obligated under this Section within a reasonable time after receiving notice thereof (but in no event not later than thirty (30) days after receiving such notice), the Owner or the Engineer, as the case may be, shall have the right, but not the duty, to satisfy and discharge the Claim by suit, settlement or otherwise. The amount of such Claim determined to be due by way of suit, settlement or otherwise (and attorneys' fees and other costs and expenses incident thereto), shall immediately become due and payable by the Contractor to the Owner or the Engineer, as the case may be, upon demand.

38.0 INFRINGEMENT OF PATENTS

A. If the Contractor uses any design, device or material covered by letters patent or copyright, he shall provide for such use by suitable agreement with the owner of such patented or copyrighted design, device or material. It is mutually agreed and understood that, without exception, the Contract Price shall include all royalties or costs arising from the use of such design, device or materials in any way involved in the work.

B. The Contractor shall assume all liability and indemnify and save harmless the Owner and the Engineer from and against all claims, suits, proceedings, damages, losses, expenses, fees, and royalties arising from any infringement, real or claimed, of any patent on any article, machine, manufacture, structure, composition, arrangement, improvement, design, device, method or process embodied or used in the performance of the Contract. The Owner or the Engineer as the case may be, will give written notice of all such claims and patent infringements suits or proceedings instituted against it or them to the Contractor, who shall defend same, and will give the Contractor authority, assistance and all available information to enable him so to do.

39.0 CONSEQUENTIAL DAMAGES

Neither party to the Contract, nor their agents or employees, shall be liable to the other party for consequential damages.

40.0 LAWS, REGULATIONS, AND PERMITS

A. The Contractor shall at all times observe and comply with all federal and state laws, and local by-laws, ordinances, and regulations in any manner affecting the conduct of the work, and shall indemnify and save harmless the Owner and the Engineer against any claim or liability arising from or based on the violation of any such law, by-law, ordinance, regulation, order or decree, whether by the Contractor

or by his employees, or by his subcontractors or their employees.

B. The Contractor shall give all notices as required by all applicable laws, ordinances, rules, and regulations.

C. The Contractor shall procure all necessary state, municipal, and other governmental permits, licenses and inspections, and shall pay all fees and charges in connection therewith. The Owner may elect to procure and pay for all or some of the permits, licenses, and inspections; in which case, the Owner will indicate this in writing and be responsible for these costs. In the event of violations, the Contractor shall pay all fines and penalties in connection therewith.

D. A copy of each permit or license shall be furnished to the Owner.

41.0 TAXES AND WITHHOLDINGS

The Contractor shall pay all federal, state and local income, gross receipt and franchise taxes, and taxes of every other nature, due and payable by Contractor in connection with all work provided for in this Contract unless specifically stated otherwise. The Contractor shall make any and all payroll deductions required by law including all interest and penalties payable under said law as a result of noncompliance therewith. The Contractor shall hold the Owner harmless from any liability on account of any such taxes or withholdings.

42.0 REQUIREMENTS FOR HEALTH AND SAFETY

A. The Contractor shall observe all federal, state, and local laws and regulations pertaining to health and safety, handling of foodstuffs, water supply, sanitary facilities, and waste disposal and shall provide and maintain the facilities and services necessary to accomplish these requirements.

B. The importance of safety of all workers on the project shall be recognized and accident prevention shall be an integral part of the Contractor's operations. The Contractor shall have a safety program and shall conduct his work in a safe manner, take all precautions necessary, and shall be solely responsible for the safety of the work. The Contractor and his subcontractors performing any part of the work shall not require any person employed in the performance of the Contract to work in surroundings or under working conditions which are unsanitary, hazardous, or dangerous to his health or safety as determined under any applicable construction safety and health standards promulgated by the Secretary of Labor pursuant to the Occupational Safety and Health Act of 1970, any amendments thereto and all orders, rules, and regulations issued thereunder.

C. The Contractor shall notify the Owner as soon as he is aware of pending federal, state or local safety inspections. A copy of all OSHA inspection reports, as well as any state safety inspection reports, shall be submitted to the Owner immediately upon receipt in each instance by the Contractor. A copy of each serious accident and fatality report shall also be submitted to the Owner.

D. In the event a citation is issued by the Secretary of Labor or his authorized representative pursuant to the Occupational Safety and Health Act, the Contractor

shall be responsible for immediate correction of the situation and prompt payment of penalties assessed.

E. The Contractor shall furnish all reasonable information concerning the safety of his operations at the site as may be required by the Owner, including records of accidents to employees, exposure hours of employees, and lost time due to accidents.

F. The Contractor shall promptly correct safety deficiencies. Upon the failure of the Contractor to promptly comply with any of the requirements of these provisions, the Owner shall have the authority to correct, modify, or stop any operations of the Contractor affected by such failure until such failure is remedied. No part of the time lost due to any such modification of operations or stop orders shall be made the subject of a claim by the Contractor for extension of time or for increased costs.

G. Should the timely correction of any violation of these provisions require the use of labor or material not provided by the Contractor, the cost of same will be charged against the Contractor's account.

H. The furnishing by the Owner of guard service and other safety and security measures at the jobsite shall not relieve the Contractor of his complete responsibility and liability for security and safety pertaining to his operations.

43.0 DISPUTES

A. In the event of a dispute between the Contractor and Owner, the Contractor agrees to proceed with performance of the work in accordance with the Owner's instructions. Should the dispute be settled in favor of the Contractor, the Contract will be equitably adjusted to reflect the resolution.

SPECIAL CONDITIONS

1.0 CONTRACTOR PROVIDED SITE SERVICES AND FACILITIES

A. The Contractor is responsible for furnishing all temporary facilities, and removing said facilities upon completion of the project.

B. No serviceable railroad directly serves the jobsite.

C. The Contractor shall be responsible for any lighting required for his work.

D. The Contractor shall make, maintain, and remove his own connections at the points of supply and also provide and maintain his own piping and/or wiring for all water, air, electric power, and other services required for his erection or construction work. All such connections shall be made at points to be approved by the Owner.

E. Any services provided by the Owner may be interrupted due to causes beyond the reasonable control of the Owner. The Owner shall incur no liability for such interruptions of service.

F. The Contractor shall provide and maintain all other facilities and services required to perform the work including sanitary, first aid, trash removal, work area lighting, compressed air, telephone, heat and ventilation.

2.0 RECEIPT OF MATERIAL

A. Receipt of Material Furnished by the Owner:

1. In cases where the Owner is providing material for installation by the Contractor, the Contractor shall receive, check, unload and properly store the materials and equipment.
2. The Contractor will prepare necessary receiving reports and shortage and damage reports. Upon receipt of Material received in an apparently damaged condition, the Contractor shall immediately inform the Engineer of said damage. The material shall be set aside or handled as required by the Engineer.
3. When the material and equipment are turned over to the Contractor for storage or installation, he shall provide a receipt acknowledging quantity and condition. After the Contractor has accepted materials, equipment and services furnished by the Owner as being in good condition and correct quantity, Contractor shall be responsible for their safety from loss or damage of any nature until the finished work and/or surplus materials are accounted for and accepted by the Owner.
4. The Contractor shall pay demurrage charges resulting from Contractor delays in unloading equipment and materials furnished to the Contractor by the Owner.
5. The Contractor shall pay for damage to equipment as a result of his unloading operations.

B. Receipt of Material Furnished by the Contractor:

1. Material furnished by the Contractor shall be shipped FOB jobsite in care of Contractor.
2. Schedule deliveries to arrive when a Contractor representative is to be on site to receive the delivery. The Owner will not accept deliveries for the Contractor, or assume any liability for the Contractor's materials.

C. Maintenance of Materials and Equipment:

The Contractor shall maintain materials and equipment during storage, transfer, installation, and after installation until acceptance, all in accordance with the Manufacturers' warranty requirements.

3.0 QUALITY CONTROL

A. The Contractor shall perform inspection and provide and implement a quality

control program for the work.

B. The quality control program shall include the following:

1. Organization:
   The type, number, and reporting relationship of the personnel and a description of their duties, responsibilities, and authority shall be included.
2. Material Control:
   Information showing how procurement documents will reflect Technical Specification requirements. The systems for receiving, inspection, identification, handling, and storage of equipment and material shall be described.
3. Document Control:
   The system established to assure that only the latest approved Technical Specifications and Drawings are used for construction shall be described.
4. Special Process Control:
   The control of special processes such as welding, concrete placement, electrical terminations, non-destructive examination and other applicable processes shall be established.
5. Inspection:
   The type and frequency of inspection activities to assure compliance with the Quality Control Program shall be specified. Details of inspector training and qualification and calibration of test equipment shall be described.
6. Control of Nonconformance:
   Details of the system to report how conditions not conforming to the requirements shall be identified, documented, controlled, resolved, and verified shall be provided.
7. Records:
   Quality control records shall be accumulated, reviewed, and stored.

4.0 LABOR RELATIONS

A. The Contractor and his respective subcontractors shall be responsible for labor relations and work assignments related to this Contract.

B. The Contractor and his subcontractors shall be familiar with work assignments in effect at the Project site. Work assignments for the Project shall be reasonable, non-disruptive, and in accordance with the Procedural Rules and Regulations of the Impartial Jurisdictional Disputes Board (or its successor) or NLRB decisions. The Contractor and his subcontractors shall coordinate these work assignments in a manner satisfactory to the Owner whether made prior to the start of the work or during construction.

C. The Contractor shall keep the Owner fully informed as to potential labor problems and labor conditions which may affect the work.

5.0 ACCIDENT PREVENTION/SAFETY PROGRAM

A. The Contractor shall provide and follow an Accident Prevention/Safety Program related to his work.

B. The Contractor's written Accident Prevention/Safety Program shall, as a minimum, address the following areas:

1. The Contractor shall designate the individual responsible for implementation of the Program including indoctrination of new employees, job site inspection responsibilities, program enforcement, the conduct of Contractor's weekly safety meetings, and submission of reports

related to jobsite injuries and/or safety.

2. Accident Prevention:
   a. The Contractor shall specify the scope of indoctrination for new employees, procedures for weekly safety meetings, and the scope and frequency of jobsite inspections.
   b. The Contractor shall specify the availability and use of protective devices such as head protection, eye protection, hearing protection, respirators, safety belts and lanyards, protective clothing, and other devices.
   c. The program shall cover specific procedures for fire protection and prevention of damage to property.
   d. The Contractor's program shall set forth specific actions that will be taken to require compliance of the Contractor's Safety Program by his subcontractors.
3. First Aid:
   a. The Contractor shall provide personnel trained in first aid procedures.
   b. The Contractor shall provide a clearly marked first aid kit at the work site.
   c. The Contractor shall provide first aid equipment including stretchers, splints, personnel lifting devices, and blankets.
   d. The Contractor shall provide transportation to health care facilities as required.

6.0 FIRE PROTECTION

A. The Contractor shall participate in the Project Fire Protection Program. The following shall apply:
   1. Portable dry chemical fire extinguishers shall be provided by the Contractor and shall be located so as to be immediately available during welding, cutting, or burning operations.
   2. Fire blankets or other noncombustible barriers shall be provided and used to prevent sparks or welding slag from falling below the elevation on which such work is being conducted.
   3. Flammables and combustibles shall be stored in a safe manner. Excess combustibles, including lumber not in use, cardboard, paper, and similar materials, shall be removed daily from construction areas.

7.0 ENVIRONMENTAL PROGRAM

A. The Contractor and his subcontractors shall maintain and enforce a program for the protection of the environment and take immediate action to correct any environmental problems created by their work operations.

B. Particular attention shall be given to the following:
   1. Liquid Wastes:
      Liquid wastes shall be collected and disposed of offsite. Liquid wastes shall not be disposed of in the site drainage system.
   2. Fugitive Dust:
      The Contractor shall remove dust producing material to minimize fugitive dust problems.
   3. Vehicular Emissions:
      Equipment and vehicles shall be in good operating condition and regularly maintained to minimize air emissions.

4. Open Burning:
   Open burning will not be permitted.
5. Traffic:
   Traffic shall be confined to construction roads only.
6. Disposal of Water:
   Water collected during construction shall be disposed of by the Contractor in such a manner so as to fully comply with all conditions set forth by the Owner and any agency of the local, state or federal government.
7. Sanitary and Hazardous Wastes:
   The Contractor shall dispose of sanitary and hazardous waste in accordance with all applicable federal, state, and local regulations.

C. Sustainability (Green) Strategy

The City of Oak Ridge (Owner) is working toward becoming a more sustainable community. To assist with this effort, firms and individuals responding to this bid request are required to submit a listing of sustainability strategies that will be utilized during the project. The sustainability strategies could include but are not limited to the following:

1. Recycled-content and sustainable building product selection, specification and procurement.
2. Waste reduction strategies, such as construction & demolition waste management plans and specifications, deconstruction plans and specifications, storage and collection of recyclable and other reuse opportunities.
3. Use of the US Green Building Council's LEED Green Building Rating System to guide project design.
4. Green operating and maintenance plans.
5. Commissioning a green building.
6. Energy modeling and analysis.

8.0 DETAILED SCHEDULE

A. The schedule dates, made part of this Contract, shall be the basis for the Contractor's detailed schedule.

B. The Contractor's detailed schedule shall be submitted by the Contractor, in a form acceptable to the Owner, within five (5) days after Contract award for use in monitoring the work.

C. The Contractor shall furnish the Owner with an updated detailed schedule monthly, at the time that the progress payment request is presented. The updated schedule shall indicate progress to date for each activity, including all changes. Any activities or dates which have been added, deleted or modified shall be circled to highlight the change. Detailed reasons for changes and their effects shall be provided by the Contractor. If the Contract completion or other critical milestone dates are forecast as being later than the date specified in the Contract, the Contractor shall submit a recovery plan by which he proposes to bring the work back on schedule. The plan shall indicate revised manpower and equipment/material requirements.

9.0 CORRESPONDENCE AND INVOICES

A. Correspondence and Transmittals:

1. Correspondence and transmittals of information shall reference the Contract number and shall be sent to the owner in triplicate.

.

10 GENERAL

A. In respect to General Conditions, obtaining permits are the responsibility of the Contractor.

B. Contractor agrees to cooperate with local public officials and civic groups in civic matters in the interest of maintaining good community relations. It is planned that the Owner will issue all public statements, press releases and similar publicity concerning the project, its progress, completion, and characteristics. Contractor shall not make or assist anyone to make, any such statements, releases, photographs, or publicity without prior written approval of the Owner.

C. Contractor shall submit a written request with description and await approval from the Owner prior to erecting any signs at jobsite other than those required for safety purposes.

11.0 COMPLIANCE WITH LAWS

The Contractor shall comply with all applicable Federal, State, County and local laws, ordinances, statutes, and regulations.

5. APPENDIX B DEFINITIONS OF TERMS

Aging Factor A factor used to ensure that a battery will meet its duty cycle requirement upon initial installation and at its end-of-life. It is common for batteries to deliver 90 to 95% of rated capacity upon delivery. Capacity eventually rises to 100%, stabilizes there for a period of time, then starts to decrease to 80%. Capacity drops rapidly after reaching 80%, so 80% is assumed to be the point at which the battery should be
replaced. The aging factor used would then be 1.25 (1/80%).

Battery Two or more cells electrically connected to form a unit. Under common usage, the term also applies to a single cell.

Cutoff Voltage Cell or battery voltage at which the discharge is terminated. The cutoff voltage is specified by the manufacturer and is a function of discharge rate and temperature. (Also called end-of-duty cycle voltage.)

Design Margin Factor Used to compensate for spare or excess capacity for future loads. **(k)** The design margin factor can be assumed to be 1.0 for UPS applications where the battery system is sized for full capacity of the inverter. For general-purpose applications, the design margin factor can range from 1.10 to 1.25.

Duty Cycle The load currents a battery is expected to supply for a specified time period.

End-of-Duty Cycle See "Cutoff Voltage."

Equalizing Charge Charge applied to a battery which is greater than the normal float charge which is used to completely restore the active materials in the cell, bringing the cell float voltage and the specific gravity of the individual cells back to "equal" values.

Float Charge Method of charging in which a secondary cell is continuously connected to a constant-voltage supply that maintains the cell in a fully-charged condition.

Flooded-Type Lead-Acid Two or more cells electrically connected for producing electricity.

Battery energy through a chemical reaction whose electrolyte is a liquid. A flooded-type lead-acid battery is housed in a transparent jar so that the internal plate structure can be viewed to ascertain the condition of the battery. The flooded lead-acid battery is also equipped with openings for the addition of water (which is evaporated and electrolyzed into gases) and explosion proof vents to reduce the hazard of accumulating hydrogen and oxygen within the cell from an external ignition source such as an electric spark or cigarette lighter.

Gel Cell The gel cell uses a silica added to the electrolyte to form a gel which liquefies above some fixed stress level, and converts back into a gel when left standing. Only the electrolyte between and around the plates will gel. The electrolyte in the pores of the plates and microporous separators remains liquid.

Grid Alloy Material composition of the positive plate, such as lead calcium, lead antimony, or lead selenium.

Grid Growth Increase in dimension of lead-battery plates caused by oxidation of metallic lead grids into lead dioxide, which consumes more volume.

Harmonics A sinusoidal component of a periodic wave or quantity having a frequency that is an integral multiple of the fundamental frequency. For example, a third harmonic is equivalent to three times the fundamental frequency.

Insulated Tool A tool or device which has conductive parts and is either coated or covered with a dielectric material.

Limiting Oxygen Index The flammability index of the plastic material used in the **(LOI)** construction of the battery jar. LOI ratings of 28 or greater are desirable due to the plastic's ability to withstand fires rather than contribute to them.

Pilot Cell A selected cell whose condition is assumed to indicate the condition of the entire battery string. The pilot cell is usually selected for representative measurements for a select

period of time. Once this time period has elapsed, another cell from the battery string is selected in turn to be the pilot cell.

Positive Plate The grid and active material from which current flows to the external circuit when the battery is discharging. The positive plate can be composed of pure lead or a lead alloy such as calcium, antimony, or selenium.

Separator Electrically insulating layer of material which physically separates electrodes of opposite polarity. Separators must be permeable to ions in the electrolyte, and may also have the function of storing or immobilizing the electrolyte.

Specific Gravity Ratio of the weight of a solution to the weight of an equal volume of water at a specified temperature. Used as an indicator of the state of charge of a cell or battery.

Temperature Correction Factor (k) A factor used to compensate for battery temperatures other than 77°F, which is the standard optimum rating for battery operation. At temperatures above 77°F, more capacity (ampere-hours) can be obtained from the battery, but battery life is reduced. At temperatures lower than 77°, less capacity can be obtained, but battery life is extended. Consult IEEE 450 for correction factors.

Terminal External electric connections of a cell or battery, also referred to as "terminal post" or "post."

UPS Uninterruptible power supply; a system designed to automatically provide power when "normal" utility line power is lost, without delay or transients.

6. APPENDIX C DESIGN CALCULATIONS

CORED Battery Study - Summary of Results

					Study Results		
	Existing Equipment				With Future Communications Equipment		
	Battery Model	Battery Voltage	Battery Size	Charger Size	Battery Model	Battery Size	Charger Size
Substation 100	Alcad MP64	48V	64AH	20A	3DJ-200	200 A-H	20A
Substation 200	Alcad MC70P	48V	70AH	20A	3DJ-200	200 A-H	20A
Substation 300	Alcad MP64	48V	64AH	20A	3DJ-200	200 A-H	20A
Substation 400	Alcad MP145	48V	64AH	20A	3DJ-200	200 A-H	20A
Substation 500	Americad MED-48	48V	48AH	20A	3DJ-200	200 A-H	20A
Substation 600	C&D 4JC150	130V	150AH	12A	3DJ-200	200 A-H	20A
Substation 700	Alcad MP64	48V	64AH	20A	3DJ-200	200 A-H	20A
Substation 800	Alcad H140P	130V	140AH	30A	3DJ-200	200 A-H	20A
Substation 900	Alcad HC145P	130V	145AH	30A	3DJ-200	200 A-H	20A

Note: Battery voltages will remain the same in each substation.

Existing Substation Photos

Sub 100

Sub 200

Existing Substation Photos

Sub 300

Sub 400

Existing Substation Photos

Sub 500

Sub 600

Sub 700

Existing Substation Photos

Sub 800

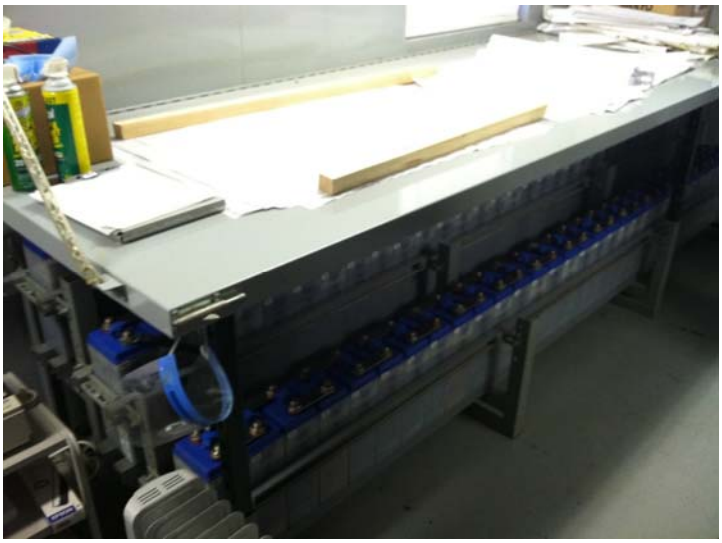

Sub 900

C&D TECHNOLOGIES, INC.
1400 UNION MEETING ROAD
BLUE BELL, PA 19422-0858
(215) 619-2700
FAX: (215) 619-7840

Title:	CORED Battery Study
Company:	CORED
Sized By:	Clifford Hurst
Date:	Wednesday, April 01, 2015
Reference No.:	Sub 100

Key Parameters:		Parallel Strings:	1
Number of Cells:	24	Minimum Temp:	60.0 F
Number of Jars:	8	Design Margin:	1.10
Cell Final Voltage:	1.75 vDC	Aging Factor:	1.25

Load Information

Profile:	Step Load	
	Load (amps)	Time (min)
Period 1	9	480
Period 2	61.45	1
Total Time:	8 hr. 1 min.	
AH Removed	73.02	
Random Load:	n/a	
Duration:	n/a	

Battery:

Model:	3DJ-200
Specific Gravity:	1.215
Type:	Flooded 20 year
Product Line:	DJ
Selection Criteria:	By Battery Type - Flooded 20 year
% of Requirement:	119.95 %
Number of Jars:	8
Jar Length:	8.09 in.
Jar Width:	13.58 in.
Jar Height:	15.22 in.
No. Plates:	9
Float vpc:	2.21 vDC
Max vpc:	2.33 vDC
Jar Weight:	139.00 lbs.
Battery Weight:	1,112.00 lbs.

The C&D Sizing Program adheres to the battery sizing methodologies found in the current versions of IEEE-485, Practice for Sizing Lead Acid Batteries for Stationery Applications and IEEE1184, Guide for Selection/Sizing of Batteries for Uninterruptible Power Systems

Battery Rack:

	Rack 1
Qty:	1
Model:	RDB0800-06EP1P
Drawing No.:	M-11414
Style:	1 Tier
Rails:	Powder Coated 'Painted' Rail
Rating:	EP1
Length:	6.00 Ft.
Width:	18.19 in.
Height:	16.69 in.

Per Rack Section

Rack Area:	9.10 sq. Ft.
Rack Weight:	97.00 lbs.

Per Battery String

Utilization:	95.44 %
Rack Area:	9.10 sq. Ft.
Rack Weight:	97.00 lbs.

FORM # BSP-A3 REV DATE 06/18/02

Wednesday, April 01, 2015

© 2015 C&D Technologies, Inc.

All critical calculations must be verified with C&D applications.
Specifications are subject to change without notice.

C&D TECHNOLOGIES, INC.
1400 UNION MEETING ROAD
BLUE BELL, PA 19422-0858
(215) 619-2700
FAX: (215) 619-7840

COMPANY: CORED
REF: Sub 100

DATE: 4/1/2015
SIZED BY: Clifford Hurst
IEEE STD.: 485-2010

LOWEST DESIGN TEMPERATURE	60.0 F	MINIMUM DESIGN CELL VOLTAGE	1.75	SIZING BASIS PLATE NOMENCLATURE	DJ

Load Period	Load (amperes)	Change in Load (amperes)		Duration of Load Period (minutes)	Time to End of Section (minutes)	Capacity Amperes per Pos. Plate	Required Section Cell Size Positive Plates	
		+ Values	- Values				+ Values	- Values
SECTION 1								
1	9.00	9.00		480	480	6.20	1.453	
						SECTION 1 TOTAL:	1.453	
SECTION 2								
1	9.00	9.00		480	481	6.19	1.455	
2	61.45	52.45		1	1	71.86	0.730	
						SECTION 2 TOTAL:	2.185	

MAXIMUM SELECTED SIZE	2.18	+ RANDOM LOAD SIZE	0.00	= Base Design Size	2.18
		BASE DESIGN MULTIPLIERS		X Temperature Correction	1.110
				X Design Margin	1.10
				X Aging Factor	1.25
				= NUMBER OF POSITIVE PLATE	3.33
POSITIVE PLATES	4	Strings per System	1	Cell Model	3DJ-200
				CELLS PER JAR	3

FORM # BSP-A1 REV DATE 3/21/05

Wednesday, April 01, 2015

© 2015 C&D Technologies, Inc.
All critical calculations must be verified with C&D applications.
Specifications are subject to change without notice.

Mesa Associates, Inc.
Engineers & Consultants
10604 Murdock Drive
Knoxville, TN 37932
(865) 671-5400

CALCULATION SHEET

Client/job	CORED Substation 100 Battery Study
Mesa Task #	1330500
Calculated by:	Mandy Elgan — Date: 6/17/2014
Checked by:	Keith Hurst — Date: 3/10/2015

1.0 Purpose

The purpose of the calculation is to size the substation battery and battery charger. The methodology is supported by IEEE Standard 485, "Recommended Practice for Sizing Lead Acid Batteries for Stationary Applications". The IEEE method is designed to cover continuous, non-continuous, and random loads.

2.0 Scope

This calculation documents the DC load requirements and verifies that the 48VDC battery and its charger capacity are not exceeded. This calculation will document the continuous loads, non-continuous loads, random loads, and the periods of operation. The required capacity of the charger will be determined using the IEEE-485 calculation method. The results of this calculation will identify the size and type of battery and battery charger required.

2.1 The Amp/Positive plate calculation method will be used.
2.2 A 1.10 design margin is used for unexpected load growth.
2.3 An aging factor of 1.25 will be used for battery decay to ensure a full life of the battery.
2.4 The minimum battery voltage for 48VDC system is 42 Volts.
2.5 The maximum battery voltage for 48VDC system is 54 Volts.

3.0 References

Single Line Diagram(s)
Relay Panel Front View(s)
Site Visit Notes and Photos

4.0 Design Input

Number of Cells	24
Design Margin	1.10
Aging Factor	1.25
Ambient Temp	60
Temp Factor	1.11

Electrolyte Temp. ºF	Electrolyte Temp. ºC	Cell Size Correction Factor	Electrolyte Temperature ºF	Electrolyte Temperature ºC	Cell Size Correction Factor
25	-3.9	1.52	80	26.7	0.98
30	-1.1	1.43	85	29.4	0.96
35	1.7	1.35	90	32.2	0.94
40	4.4	1.3	95	35	0.93
45	7.2	1.25	100	37.8	0.91
50	10	1.19	105	40.6	0.89
55	12.8	1.15	110	43.3	0.88
60	15.6	1.11	115	46.1	0.87
65	18.3	1.08	120	48.9	0.86
70	21.1	1.04	125	51.7	0.85
77	25	1			

Mesa Associates, Inc.
Engineers & Consultants
10604 Murdock Drive
Knoxville, TN 37932
(865) 671-5400

CALCULATION SHEET

Client/job	CORED Substation 100 Battery Study		
Mesa Task #	1330500		
Calculated by:	Mandy Elgan	Date:	6/17/2014
Checked by:	Keith Hurst	Date:	3/10/2015

5.0 Computation & Analysis

5.1 Existing Loads

5.1.1 Continuous Loads

5.1.1.1

Determine the amount of current constantly connected and energized, such as lights, digital relays, RTUs, power supplies, etc.

5.1.1.2 Continuous Load Data

Set 1

Device	Desc	Quantity	Amps ea.	Total Amps
BKR CT Ammeter	CRM 077-08AA	9	0	0
XFMR Neutral Ammeter	CRM 077-016FU	3	0	0
(50/51) Phase Overcurrent	GEC MCGG 22	9	0.0416	0.3744
(50N) Ground Overcurrent	GEC MCGG 22	3	0.0416	0.1248
(64N) Neutral Overcurrent	GEC MCGG 22	3	0.0416	0.1248
S.C.I. JEM-2		3	0.0012	0.0036
Device (62)	AG 7012NF	1	0.166	0.166
Device (80)	GE 1ZNGV17A3F	1	0.066	0.066
Green Indicating Light	ET-16	3	0.02	0.06
Red Indicating Light	ET-16	3	0.02	0.06
CSR-01 Switch		3	0	0

5.1.1.3 **Total Continuous Load** **0.980 A**

5.1.1.4 Continuous loads from battery charger inspection during site visit **1 A**

5.1.1.5

For an existing Station, the measured continuous load in line 5.1.1.4 can be used for documenting changes to the calculated continuous load. Assumptions must be attached to this calculation as to how the actual measured current affects the component calculation method, and while the calculated continuous load is being adjusted. When using the value from the Battery Reports, one must ensure all equipment is operating and the charger is not in the equalizing mode.

Mesa Associates, Inc.
Engineers & Consultants
10604 Murdock Drive
Knoxville, TN 37932
(865) 671-5400

CALCULATION SHEET

Client/job	CORED Substation 100 Battery Study		
Mesa Task #	1330500		
Calculated by:	Mandy Elgan	Date:	6/17/2014
Checked by:	Keith Hurst	Date:	3/10/2015

5.1.2 Non-Continuous Loads

5.1.2.1 Determine the maximum number of breakers that are likely to trip at one time such as Breaker Failure or Bus Differential. When calculating the total trip current, remember that every breaker may have a different tripping current and/or DC charging motor. Per IEEE Std. 485, "Although momentary loads may exist for only a fraction of a second, each is considered to last for a full minute because the instantaneous battery voltage drop for a given momentary load is essentially the same as the voltage drop after one minute".

5.1.2.2 Non-Continuous Load Data

Device	Quantity	Amps ea.	Total Amps
Annunciator Relay	12	0.0625	0.75
Trip Coil	3	16	48
BF LO Relay Electroswitch 7825DD	1	3.7	3.7

5.1.2.3 Total Non-Continuous Load **52.45**

5.1.2.4 Analyze the station and determine if any breakers use a DC closing solenoid or a DC powered switch. These devices can draw a great many amps and may exceed the value calculated in line 5.1.2.3. If more than one of these devices is present, then select the unit with the largest current requirement.

5.1.2.5 Close Breaker or Switch current draw 4.6

5.1.2.6 Total Non-continuous Load 52.45

5.1.3 Random Loads

5.1.3.1 This section calculates the loads that occur at random times, such as emergency pumps, heaters, etc

5.1.3.2 Random Load Data

Device	Desc	Quantity	Amps ea.	Total Amps
N/A				0

5.1.3.3 Total Random Loads 0

Mesa Associates, Inc.
Engineers & Consultants
10604 Murdock Drive
Knoxville, TN 37932
(865) 671-5400

CALCULATION SHEET

Client/job	CORED Substation 100 Battery Study
Mesa Task #	1330500
Calculated by:	Mandy Elgan — Date: 6/17/2014
Checked by:	Keith Hurst — Date: 3/10/2015

5.2 Future Loads

5.2.1 Future Continuous Loads

5.2.1.1

Determine the amount of current constantly connected and energized such as lights, digital relays, RTUs, power supplies, etc.

5.2.1.2 Future Continuous Load Data

Device	Desc	Quantity	Amps ea.	Total Amps
	SCADA System	1	3	3
	FO Dead-End or Head-End Boxes	1	5	5
OR	Repeater or Small Mesh Antennae	1	3	3

5.2.1.3 Total Future Cont. Load 8

5.2.2 Non-Continuous Loads

5.2.2.1 Determine the maximum number of breakers that are likely to trip at one time such as Breaker Failure or Bus Differential. When calculating the total trip current, remember that every breaker may have a different tripping current and/or DC charging motor. Per IEEE Std. 485, "Although momentary loads may exist for only a fraction of a second, each is considered to last for a full minute because the instantaneous battery voltage drop for a given momentary load is essentially the same as the voltage drop after one minute".

5.2.2.2 Future Non-Continuous Load Data

Device	Desc	Quantity	Amps ea.	Total Amps
	N/A			

5.2.2.3 Total Future NonCont. Load 0

5.2.2.4 Analyze the future station plans and determine if any breakers use a DC closing solenoid or a DC powered switch. These devices can draw a great many amps and may exceed the value calculated in line 5.1.2.3. If more than one of these devices is present, then select the unit with the largest current requirement.

5.2.2.5 Future Close Breaker or SW Current draw 0

5.2.2.6 Future Total Non-continuous Load 0
(Larger of lines 5.2.2.3 or 5.2.2.5)

5.2.3 Random Loads

5.2.3.1 This section calculates the loads that occur at random times, such as emergency pumps, heaters, etc.

5.1.3.2 Future Random Load Data

Device	Desc	Quantity	Amps ea.	Total Amps
	N/A			0

5.2.3.3 Total Future Random Loads 0

Mesa Associates, Inc.
Engineers & Consultants
10604 Murdock Drive
Knoxville, TN 37932
(865) 671-5400

CALCULATION SHEET

Client/job	CORED Substation 100 Battery Study
Mesa Task #	1330500
Calculated by:	Mandy Elgan — Date: 6/17/2014
Checked by:	Keith Hurst — Date: 3/10/2015

5.3	Total Load Data	Set 1
5.3.1	**Total Continuous Loads**	**9.000**
5.3.2	Total Non Continuous Loads (trip)	52.45
5.3.3	Largest Close or SW current draw (Larger of 5.1.2.5 or 5.2.2.5)	4.6
5.3.4	**Total Non Continuous Loads (trip)** (Larger of 5.3.2 or 5.3.3)	**52.45**
5.3.5	**Total Random Loads**	**0**

Set 1	Description	Amps	Duration (Min)
Section 1	Total Continuous Loads	9.000	480
Section 2	Total Continuous Loads + Total Non-Continuous Loads	61.450	1

(Calculation below was completed using C&D Battery Sizing Software)

Load Period	Load (amperes)	Change in Load (amperes) + Values	Change in Load (amperes) - Values	Duration of Load Period (minutes)	Time To End of Section (minutes)	Capacity Amperes per Pos Plates	Required Section Cell Size Positive Plates + Values	Required Section Cell Size Positive Plates - Values
SECTION 1								
1	9.000	9.000		480	480	6.2	1.453	
						SECTION 1 TOTAL :	**1.453**	
SECTION 2								
1	9.000	9.000		480	481	6.19	1.455	
2	61.450	52.450		1	1	71.86	0.730	
						SECTION 2 TOTAL :	**2.185**	
RANDOM EQUIPMENT LOADS								
	0							

number obtained via C&D data

Maximum Size: 2.18 **+ Random Load Size:** 0.00 **= Base Design Size:** 2.18

X Temperature Correction: 1.11
X Design Margin: 1.10
X Aging Factor: 1.25
= Number of Positive Plates: 3.33

Cell Model: C&D 3DJ-200 or Equivalent **Nominal AH Rating: 200** **8 Hr Rating: 25**

Positive Plates: 4 **Strings Per System: 1** **Cell per Jar: 3**

Mesa Associates, Inc.
Engineers & Consultants
10604 Murdock Drive
Knoxville, TN 37932
(865) 671-5400

CALCULATION SHEET

Client/job	CORED Substation 100 Battery Study		
Mesa Task #	1330500		
Calculated by:	Mandy Elgan	Date:	6/17/2014
Checked by:	Keith Hurst	Date:	3/10/2015

5.4 Methodology & Recommendation

5.5.1 Methodology

The above calculation is based on a duty cycle of two distinct periods. The first period is the constant draw of the continuous current while the station is without an AC feed. We have assumed worst case. We have used an eight (8) hour period of time for this section as this has typically been used in the industry. Also, this period has the most affect on this type of battery and produces the most losses.

The next period includes all the continuous currents plus the current need to trip three breakers, one lockout relay, and DC spring motor for three breakers. This would be the scenario for a future design with a bus diff, which has a higher non-continuous load than the current design breaker failure, and all would occur within a minute of duration.

5.4.2 Recommendation

Mesa Associates recommends one sets of C&D 3DJ-200 batteries or equivalent. This battery will supply all needs for the existing configuration and be adequate for future build out of the communications system.

5.5 Battery Fault Current

Per IEEE, the maximum fault current a battery can produce is generally eight to ten times the one minute rating of the battery system. In the absence of exact data from the manufacturer, we will assume worst case and use ten times one minute rating. This should be used to size protective devices.

One minute rating of the battery system	287.4	(from C&D literature)
5.5.1 Maximum DC Fault Current Available	2874	

5.6 Charger Selection

5.6.1 Charger output=continuous load + ((1.1*8hr rating of battery)/hours to recharge) per IEEE

5.6.2	Total Continuous Loads	9.000
5.6.3	8 Hour Rating of Battery	25
5.6.4	Hours to Recharge	8
5.6.5	Required Charger Output	12.44

5.6.6 Battery Charger Recommendation

IEEE recommends time for recharge between 8 and 12 hours. Mesa also recommends standardizing sizes where possible with a minimum size of 20 amps, Universal input voltage, DNP 3.0 communications, and relay alarm outputs. Using this logic, a **Lamarche A75DE-20-48V-ABD-1-24L-46R-21P** charger (or equivalent) would be required. This model would include an input voltage of 240Vac and an output of 48Vdc and 20Adc, communications capability, and alarm relays. The total continuous current used in this calculation includes adequate capacity to allow for future build out.

Mesa Associates, Inc. Engineers & Consultants 10604 Murdock Drive Knoxville, TN 37932 (865) 671-5400 ***CALCULATION SHEET***	Client/job: CORED Substation 100 Battery Study Mesa Task #: 1330500 Calculated by: Mandy Elgan Date: 6/17/2014 Checked by: Keith Hurst Date: 3/10/2015

6.0 Room Exhaust

6.1 Assumptions

6.1.1 Lead acid batteries produce 0.016 cubic feet of hydrogen per cell, per hour at standard pressure

6.1.2 Percent of overcharge assumed during recharge is 20%

6.2 Calculate Hydrogen Concentration

Hydrogen Concentration	H =	3.84
H = ((C X O X G X A) / R) / 100		
C = number of cells	24	
O = percent of overcharge assumed during recharge, use 20% (20)	20	
G = Volume of hydrogen produced by one amp of charge. Use (0.016)	0.016	
A = 8-hour rated capacity of battery in amp hours	200	
R = Assume gas is released during last (4) hours of 8 hour charge	4	

6.3 Calculate Room Volume

Room Volume	V =	1062.50
W x L x H		
W = Width	10	
L = Length	12.5	
H = Height	8.5	

6.4 Ventilation Requirement

Ventilation Requirement	=	166.02	
V = R x P / H x 60 mins			
R = Room cu. ft.	1062.50		
P = Max percentage of hydrogen gas allowed	0.01		
H = Total hydrogen produced per hour	3.84		

6.5 Fan Requirement

Fan Requirement	=	384	cu ft per hour
Fan Size = R x 60 / V			
R = Room cu. ft.	1062.50		
V = Ventilation req'd	166.02		
	or		**6.4 CFM**
Exising Fan rated (conservative assmption)	100	**cfm**	
Set existing fan to run minutes per hour	4	**Minutes/Hour**	

C&D TECHNOLOGIES, INC.
1400 UNION MEETING ROAD
BLUE BELL, PA 19422-0858
(215) 619-2700
FAX: (215) 619-7840

Title:	CORED Battery Study
Company:	CORED
Sized By:	Clifford Hurst
Date:	Saturday, April 04, 2015
Reference No.:	Sub 200

Key Parameters:		Parallel Strings:	1
Number of Cells:	24	Minimum Temp:	60.0 F
Number of Jars:	8	Design Margin:	1.10
Cell Final Voltage:	1.75 vDC	Aging Factor:	1.25

Load Information

Profile:	Step Load	
	Load (amps)	Time (min)
Period 1	9	480
Period 2	61.45	1
Total Time:	8 hr. 1 min.	
AH Removed	73.02	
Random Load:	n/a	
Duration:	n/a	

Battery:

Model:	3DJ-200
Specific Gravity:	1.215
Type:	Flooded 20 year
Product Line:	DJ
Selection Criteria:	By Battery Type - Flooded 20 year
% of Requirement:	119.95 %
Number of Jars:	8
Jar Length:	8.09 in.
Jar Width:	13.58 in.
Jar Height:	15.22 in.
No. Plates:	9
Float vpc:	2.21 vDC
Max vpc:	2.33 vDC
Jar Weight:	139.00 lbs.
Battery Weight:	1,112.00 lbs.

The C&D Sizing Program adheres to the battery sizing methodologies found in the current versions of IEEE-485, Practice for Sizing Lead Acid Batteries for Stationery Applications and IEEE1184, Guide for Selection/Sizing of Batteries for Uninterruptible Power Systems

Battery Rack:

	Rack 1
Qty:	1
Model:	RDB0800-06EP1P
Drawing No.:	M-11414
Style:	1 Tier
Rails:	Powder Coated 'Painted' Rail
Rating:	EP1
Length:	6.00 Ft.
Width:	18.19 in.
Height:	16.69 in.

Per Rack Section

Rack Area:	9.10 sq. Ft.
Rack Weight:	97.00 lbs.

Per Battery String

Utilization:	95.44 %
Rack Area:	9.10 sq. Ft.
Rack Weight:	97.00 lbs.

FORM # BSP-A3 REV DATE 06/18/02

Saturday, April 04, 2015

© 2015 C&D Technologies, Inc.

All critical calculations must be verified with C&D applications.
Specifications are subject to change without notice.

C&D TECHNOLOGIES, INC.
1400 UNION MEETING ROAD
BLUE BELL, PA 19422-0858
(215) 619-2700
FAX: (215) 619-7840

COMPANY: CORED
REF: Sub 200

DATE: 4/4/2015
SIZED BY: Clifford Hurst
IEEE STD.: 485-2010

LOWEST DESIGN TEMPERATURE	60.0 F	MINIMUM DESIGN CELL VOLTAGE	1.75	SIZING BASIS PLATE NOMENCLATURE	DJ

Load Period	Load (amperes)	Change in Load (amperes)		Duration of Load Period (minutes)	Time to End of Section (minutes)	Capacity Amperes per Pos. Plate	Required Section Cell Size Positive Plates	
		+ Values	- Values				+ Values	- Values
SECTION 1								
1	9.00	9.00		480	480	6.20	1.453	
						SECTION 1 TOTAL:	1.453	
SECTION 2								
1	9.00	9.00		480	481	6.19	1.455	
2	61.45	52.45		1	1	71.86	0.730	
						SECTION 2 TOTAL:	2.185	

MAXIMUM SELECTED SIZE	2.18	+ RANDOM LOAD SIZE	0.00	= Base Design Size	2.18
		BASE DESIGN MULTIPLIERS		X Temperature Correction	1.110
				X Design Margin	1.10
				X Aging Factor	1.25
				= NUMBER OF POSITIVE PLATE	3.33
POSITIVE PLATES	4	Strings per System	1	Cell Model	3DJ-200
				CELLS PER JAR	3

FORM # BSP-A1 REV DATE 3/21/05

Saturday, April 04, 2015

© 2015 C&D Technologies, Inc.
All critical calculations must be verified with C&D applications.
Specifications are subject to change without notice.

Mesa Associates, Inc.
Engineers & Consultants
10604 Murdock Drive
Knoxville, TN 37932
(865) 671-5400

CALCULATION SHEET

Client/job	CORED Substation 200 Battery Study
Mesa Task #	1330500
Calculated by:	Mandy Elgan — Date: 6/17/2014
Checked by:	Keith Hurst — Date: 3/10/2015

1.0 Purpose

The purpose of the calculation is to size the substation battery and battery charger. The methodology is supported by IEEE Standard 485, "Recommended Practice for Sizing Lead Acid Batteries for Stationary Applications". The IEEE method is designed to cover continuous, non-continuous, and random loads.

2.0 Scope

This calculation documents the DC load requirements and verifies that the 48VDC battery and its charger capacity are not exceeded. This calculation will document the continuous loads, non-continuous loads, random loads, and the periods of operation. The required capacity of the charger will be determined using the IEEE-485 calculation method. The results of this calculation will identify the size and type of battery and battery charger required.

2.1 The Amp/Positive plate calculation method will be used.
2.2 A 1.10 design margin is used for unexpected load growth.
2.3 An aging factor of 1.25 will be used for battery decay to ensure a full life of the battery.
2.4 The minimum battery voltage for 48VDC system is 42 Volts.
2.5 The maximum battery voltage for 48VDC system is 54 Volts.

3.0 References

Single Line Diagram(s)
Relay Panel Front View(s)
Site Visit Notes and Photos

4.0 Design Input

Number of Cells	24
Design Margin	1.10
Aging Factor	1.25
Ambient Temp	60
Temp Factor	1.11

Electrolyte Temp. ºF	Electrolyte Temp. ºC	Cell Size Correction Factor	Electrolyte Temperature ºF	Electrolyte Temperature ºC	Cell Size Correction Factor
25	-3.9	1.52	80	26.7	0.98
30	-1.1	1.43	85	29.4	0.96
35	1.7	1.35	90	32.2	0.94
40	4.4	1.3	95	35	0.93
45	7.2	1.25	100	37.8	0.91
50	10	1.19	105	40.6	0.89
55	12.8	1.15	110	43.3	0.88
60	15.6	1.11	115	46.1	0.87
65	18.3	1.08	120	48.9	0.86
70	21.1	1.04	125	51.7	0.85
77	25	1			

Mesa Associates, Inc.
Engineers & Consultants
10604 Murdock Drive
Knoxville, TN 37932
(865) 671-5400

CALCULATION SHEET

Client/job	CORED Substation 200 Battery Study		
Mesa Task #	1330500		
Calculated by:	Mandy Elgan	Date:	6/17/2014
Checked by:	Keith Hurst	Date:	3/10/2015

5.0 Computation & Analysis

5.1 Existing Loads

5.1.1 Continuous Loads

5.1.1.1

Determine the amount of current constantly connected and energized, such as lights, digital relays, RTUs, power supplies, etc.

5.1.1.2 Continuous Load Data (see Appendix A for breakdown on panels & devices)

Set 1

Device	Desc	Quantity	Amps ea.	Total Amps
BKR CT Ammeter	CRM 077-08AA	9	0	0
XFMR Neutral Ammeter	CRM 077-016FU	3	0	0
(50/51) Phase Overcurrent	GEC MCGG 22	9	0.0416	0.3744
(50N) Ground Overcurrent	GEC MCGG 22	3	0.0416	0.1248
(64N) Neutral Overcurrent	GEC MCGG 22	3	0.0416	0.1248
S.C.I. JEM-2		3	0.0012	0.0036
Device (62)	AG 7012NF	1	0.166	0.166
Device (80)	GE 1ZNGV17A3F	1	0.066	0.066
Green Indicating Light	ET-16	3	0.02	0.06
Red Indicating Light	ET-16	3	0.02	0.06
CSR-01 Switch		3	0	0

5.1.1.3 **Total Continuous Load** **0.980 A**

5.1.1.4 Continuous loads from battery charger inspection during site visit **1 A**

5.1.1.5

For an existing Station, the measured continuous load in line 5.1.1.4 can be used for documenting changes to the calculated continuous load. Assumptions must be attached to this calculation as to how the actual measured current affects the component calculation method, and while the calculated continuous load is being adjusted. When using the value from the Battery Reports, one must ensure all equipment is operating and the charger is not in the equalizing mode.

Mesa Associates, Inc.
Engineers & Consultants
10604 Murdock Drive
Knoxville, TN 37932
(865) 671-5400

CALCULATION SHEET

Client/job	CORED Substation 200 Battery Study		
Mesa Task #	1330500		
Calculated by:	Mandy Elgan	Date:	6/17/2014
Checked by:	Keith Hurst	Date:	3/10/2015

5.1.2 Non-Continuous Loads

5.1.2.1 Determine the maximum number of breakers that are likely to trip at one time such as Breaker Failure or Bus Differential. When calculating the total trip current, remember that every breaker may have a different tripping current and/or DC charging motor. Per IEEE Std. 485, "Although momentary loads may exist for only a fraction of a second, each is considered to last for a full minute because the instantaneous battery voltage drop for a given momentary load is essentially the same as the voltage drop after one minute".

5.1.2.2 Non-Continuous Load Data

Device	Quantity	Amps ea.	Total Amps
Annunciator Relay	12	0.0625	0.75
Trip Coil	3	16	48
BF LO Relay Electroswitch 7825DD	1	3.7	3.7

5.1.2.3 Total Non-Continuous Load **52.45**

5.1.2.4 Analyze the station and determine if any breakers use a DC closing solenoid or a DC powered switch. These devices can draw a great many amps and may exceed the value calculated in line 5.1.2.3. If more than one of these devices is present, then select the unit with the largest current requirement.

5.1.2.5 Close Breaker or Switch current draw 4.6

5.1.2.6 Total Non-continuous Load 52.45

5.1.3 Random Loads

5.1.3.1 This section calculates the loads that occur at random times, such as emergency pumps, heaters, etc

5.1.3.2 Random Load Data

Device	Desc	Quantity	Amps ea.	Total Amps
N/A				0

5.1.3.3 Total Random Loads 0

Mesa Associates, Inc.
Engineers & Consultants
10604 Murdock Drive
Knoxville, TN 37932
(865) 671-5400

CALCULATION SHEET

Client/job	CORED Substation 200 Battery Study
Mesa Task #	1330500
Calculated by:	Mandy Elgan — Date: 6/17/2014
Checked by:	Keith Hurst — Date: 3/10/2015

5.2 Future Loads

5.2.1 Future Continuous Loads

5.2.1.1

Determine the amount of current constantly connected and energized such as lights, digital relays, RTUs, power supplies, etc.

5.2.1.2 Future Continuous Load Data

Device	Desc	Quantity	Amps ea.	Total Amps
	SCADA System	1	3	3
	FO Dead-End or Head-End Boxes	1	5	5
OR	Repeater or Small Mesh Antennae	1	3	3

5.2.1.3 Total Future Cont. Load 8

5.2.2 Non-Continuous Loads

5.2.2.1 Determine the maximum number of breakers that are likely to trip at one time such as Breaker Failure or Bus Differential. When calculating the total trip current, remember that every breaker may have a different tripping current and/or DC charging motor. Per IEEE Std. 485, "Although momentary loads may exist for only a fraction of a second, each is considered to last for a full minute because the instantaneous battery voltage drop for a given momentary load is essentially the same as the voltage drop after one minute".

5.2.2.2 Future Non-Continuous Load Data

Device	Desc	Quantity	Amps ea.	Total Amps
	N/A			

5.2.2.3 Total Future NonCont. Load 0

5.2.2.4 Analyze the future station plans and determine if any breakers use a DC closing solenoid or a DC powered switch. These devices can draw a great many amps and may exceed the value calculated in line 5.1.2.3. If more than one of these devices is present, then select the unit with the largest current requirement.

5.2.2.5 Future Close Breaker or SW Current draw 0

5.2.2.6 Future Total Non-continuous Load 0
(Larger of lines 5.2.2.3 or 5.2.2.5)

5.2.3 Random Loads

5.2.3.1

This section calculates the loads that occur at random times, such as emergency pumps, heaters, etc

5.1.3.2 Future Random Load Data

Device	Desc	Quantity	Amps ea.	Total Amps
	N/A			0

5.2.3.3 Total Future Random Loads 0

Mesa Associates, Inc.
Engineers & Consultants
10604 Murdock Drive
Knoxville, TN 37932
(865) 671-5400

CALCULATION SHEET

Client/job	CORED Substation 200 Battery Study		
Mesa Task #	1330500		
Calculated by:	Mandy Elgan	Date:	6/17/2014
Checked by:	Keith Hurst	Date:	3/10/2015

5.3	Total Load Data	Set 1
5.3.1	**Total Continuous Loads**	**9.000**
5.3.2	Total Non Continuous Loads (trip)	52.45
5.3.3	Largest Close or SW current draw (Larger of 5.1.2.5 or 5.2.2.5)	4.6
5.3.4	**Total Non Continuous Loads (trip)** (Larger of 5.3.2 or 5.3.3)	**52.45**
5.3.5	**Total Random Loads**	**0**

Set 1	Description	Amps	Duration (Min)
Section 1	Total Continuous Loads	9.000	480
Section 2	Total Continuous Loads + Total Non-Continuous Loads	61.450	1

(Calculation below was completed using C&D Battery Sizing Software)

Load Period	Load (amperes)	Change in Load (amperes) + Values	Change in Load (amperes) - Values	Duration of Load Period (minutes)	Time To End of Section (minutes)	Capacity Amperes per Pos Plates	Required Section Cell Size Positive Plates + Values	Required Section Cell Size Positive Plates - Values
SECTION 1								
1	9.000	9.000		480	480	6.2	1.453	
						SECTION 1 TOTAL :	**1.453**	
SECTION 2								
1	9.000	9.000		480	481	6.19	1.455	
2	61.450	52.450		1	1	71.86	0.730	
						SECTION 2 TOTAL :	**2.185**	
RANDOM EQUIPMENT LOADS								
	0							

number obtained via C&D data

Maximum Size: 2.18 **+ Random Load Size:** 0.00 **= Base Design Size:** 2.18

X Temperature Correction: 1.11
X Design Margin: 1.10
X Aging Factor: 1.25
= Number of Positive Plates: 3.33

Cell Model: C&D 3DJ-200 or Equivalent **Nominal AH Rating: 200** **8 Hr Rating: 25**

Positive Plates: 4 **Strings Per System: 1** **Cell per Jar: 3**

5.4 Methodology & Recommendation

5.5.1 Methodology

The above calculation is based on a duty cycle of two distinct periods. The first period is the constant draw of the continuous current while the station is without an AC feed. We have assumed worst case. We have used an eight (8) hour period of time for this section as this has typically been used in the industry. Also, this period has the most affect on this type of battery and produces the most losses

The next period includes all the continuous currents plus the current need to trip three breakers, one lockout relay, and Annunciator. This would be the scenario for a future design with a bus diff, which has a higher non-continuous load than the current design breaker failure, and all would occur within a minute of duration.

5.4.2 Recommendation

Mesa Associates recommends one sets of C&D 3DJ-200 batteries or equivalent. This battery will supply all needs for the existing configuration and be adequate for future build out of the communications system.

5.5 Battery Fault Current

Per IEEE, the maximum fault current a battery can produce is generally eight to ten times the one minute rating of the battery system. In the absence of exact data from the manufacturer, we will assume worst case and use ten times one minute rating. This should be used to size protective devices.

One minute rating of the battery system	243	(from C&D literature)
5.5.1 Maximum DC Fault Current Available	2430	

5.6 Charger Selection

5.6.1 Charger output=continuous load + ((1.1*8hr rating of battery)/hours to recharge) per IEEE

5.6.2	Total Continuous Loads	9.000
5.6.3	8 Hour Rating of Battery	25
5.6.4	Hours to Recharge	8
5.6.5	Required Charger Output	12.44

5.6.6 Battery Charger Recommendation

IEEE recommends time for recharge between 8 and 12 hours. Mesa also recommends standardizing sizes where possible with a minimum size of 20 amps, Universal input voltage, DNP 3.0 communications, and relay alarm outputs. Using this logic, a **Lamarche A75DE-20-48V-ABD-1-24L-46R-21P** charger (or equivalent) would be required. This model would include an input voltage of 240Vac and an output of 48Vdc and 20Adc, communications capability, and alarm relays. The total continuous current used in this calculation includes adequate capacity to allow for future build out.

Mesa Associates, Inc. Engineers & Consultants 10604 Murdock Drive Knoxville, TN 37932 (865) 671-5400 ***CALCULATION SHEET***	Client/job: CORED Substation 200 Battery Study Mesa Task #: 1330500 Calculated by: Mandy Elgan Date: 6/17/2014 Checked by: Keith Hurst Date: 3/10/2015

6.0 Room Exhaust

6.1 Assumptions

6.1.1 Lead acid batteries produce 0.016 cubic feet of hydrogen per cell, per hour at standard pressure

6.1.2 Percent of overcharge assumed during recharge is 20%

6.2 Calculate Hydrogen Concentration

Hydrogen Concentration	H =	3.84
H = ((C X O X G X A) / R) / 100		
C = number of cells	24	
O = percent of overcharge assumed during recharge, use 20% (20)	20	
G = Volume of hydrogen produced by one amp of charge. Use (0.016)	0.016	
A = 8-hour rated capacity of battery in amp hours	200	
R = Assume gas is released during last (4) hours of 8 hour charge	4	

6.3 Calculate Room Volume

Room Volume	V =	1020
W x L x H		
W = Width	10	
L = Length	12	
H = Height	8.5	

6.4 Ventilation Requirement

Ventilation Requirement	=	159.375	
V = R x P / H x 60 mins			
R = Room cu. ft.	1020		
P = Max percentage of hydrogen gas allowed	0.01		
H = Total hydrogen produced per hour	3.84		

6.5 Fan Requirement

Fan Requirement	=	384	cu ft per hour
Fan Size = R x 60 / V			
R = Room cu. ft.	1020		
V = Ventilation req'd	159.375		
	or		**6.4 CFM**
Exising Fan rated (conservative assmption)	100	**cfm**	
Set existing fan to run minutes per hour	4	**Minutes/Hour**	

C&D TECHNOLOGIES, INC.
1400 UNION MEETING ROAD
BLUE BELL, PA 19422-0858
(215) 619-2700
FAX: (215) 619-7840

Title:	CORED Battery Study
Company:	CORED
Sized By:	Clifford Hurst
Date:	Wednesday, April 01, 2015
Reference No.:	Sub 300

Key Parameters:		Parallel Strings:	1
Number of Cells:	24	Minimum Temp:	60.0 F
Number of Jars:	8	Design Margin:	1.10
Cell Final Voltage:	1.75 vDC	Aging Factor:	1.25

Load Information

Profile:	Step Load	
	Load (amps)	Time (min)
Period 1	9.6	480
Period 2	78.05	1
Total Time:	8 hr. 1 min.	
AH Removed	78.10	
Random Load:	n/a	
Duration:	n/a	

Battery:

Model:	3DJ-200
Specific Gravity:	1.215
Type:	Flooded 20 year
Product Line:	DJ
Selection Criteria:	By Battery Type - Flooded 20 year
% of Requirement:	104.64 %
Number of Jars:	8
Jar Length:	8.09 in.
Jar Width:	13.58 in.
Jar Height:	15.22 in.
No. Plates:	9
Float vpc:	2.21 vDC
Max vpc:	2.33 vDC
Jar Weight:	139.00 lbs.
Battery Weight:	1,112.00 lbs.

The C&D Sizing Program adheres to the battery sizing methodologies found in the current versions of IEEE-485, Practice for Sizing Lead Acid Batteries for Stationery Applications and IEEE1184, Guide for Selection/Sizing of Batteries for Uninterruptible Power Systems

Battery Rack:

	Rack 1
Qty:	1
Model:	RDB0800-06EP1P
Drawing No.:	M-11414
Style:	1 Tier
Rails:	Powder Coated 'Painted' Rail
Rating:	EP1
Length:	6.00 Ft.
Width:	18.19 in.
Height:	16.69 in.

Per Rack Section

Rack Area:	9.10 sq. Ft.
Rack Weight:	97.00 lbs.

Per Battery String

Utilization:	95.44 %
Rack Area:	9.10 sq. Ft.
Rack Weight:	97.00 lbs.

FORM # BSP-A3 REV DATE 06/18/02

Wednesday, April 01, 2015

© 2015 C&D Technologies, Inc.

All critical calculations must be verified with C&D applications.
Specifications are subject to change without notice.

C&D TECHNOLOGIES, INC.
1400 UNION MEETING ROAD
BLUE BELL, PA 19422-0858
(215) 619-2700
FAX: (215) 619-7840

COMPANY: CORED
REF: Sub 300

DATE: 4/1/2015
SIZED BY: Clifford Hurst
IEEE STD.: 485-2010

LOWEST DESIGN TEMPERATURE	60.0 F	MINIMUM DESIGN CELL VOLTAGE	1.75	SIZING BASIS PLATE NOMENCLATURE	DJ

Load Period	Load (amperes)	Change in Load (amperes)		Duration of Load Period (minutes)	Time to End of Section (minutes)	Capacity Amperes per Pos. Plate	Required Section Cell Size Positive Plates	
		+ Values	- Values				+ Values	- Values
SECTION 1								
1	9.60	9.60		480	480	6.20	1.549	
						SECTION 1 TOTAL:	1.549	
SECTION 2								
1	9.60	9.60		480	481	6.19	1.552	
2	78.05	68.45		1	1	71.86	0.953	
						SECTION 2 TOTAL:	2.504	

MAXIMUM SELECTED SIZE	2.50	+ RANDOM LOAD SIZE	0.00	= Base Design Size	2.50
		BASE DESIGN MULTIPLIERS		X Temperature Correction	1.110
				X Design Margin	1.10
				X Aging Factor	1.25
				= NUMBER OF POSITIVE PLATE	3.82
POSITIVE PLATES	4	Strings per System	1	Cell Model	3DJ-200
				CELLS PER JAR	3

FORM # BSP-A1 REV DATE 3/21/05

Wednesday, April 01, 2015

© 2015 C&D Technologies, Inc.
All critical calculations must be verified with C&D applications.
Specifications are subject to change without notice.

Mesa Associates, Inc.
Engineers & Consultants
10604 Murdock Drive
Knoxville, TN 37932
(865) 671-5400

CALCULATION SHEET

Client/job	CORED Substation 300 Battery Study
Mesa Task #	1330500
Calculated by:	Mandy Elgan — Date: 6/2/2014
Checked by:	Keith Hurst — Date: 3/10/2015

1.0 PURPOSE

The purpose of the calculation is to size the substation battery and battery charger. The methodology is supported by IEEE Standard 485, "Recommended Practice for Sizing Lead Acid Batteries for Stationary Applications". The IEEE method is designed to cover continuous, non-continuous, and random loads.

2.0 SCOPE

This calculation documents the DC load requirements and verifies that the 48VDC battery and its charger capacity are not exceeded. This calculation will document the continuous loads, non-continuous loads, random loads, and the periods of operation. The required capacity of the charger will be determined using the IEEE-485 calculation method. The results of this calculation will identify the size and type of battery and battery charger required.

2.1 The Amp/Positive plate calculation method will be used.
2.2 A 1.10 design margin is used for unexpected load growth.
2.3 An aging factor of 1.25 will be used for battery decay to ensure a full life of the battery.
2.4 The minimum battery voltage for 48VDC system is 42 Volts.
2.5 The maximum battery voltage for 48VDC system is 54 Volts.

3.0 References

Single Line Diagram(s)
Relay Panel Front View(s)
Site Visit Notes and Photos

4.0 Design Input

Number of Cells	24
Design Margin	1.10
Aging Factor	1.25
Ambient Temp	60
Temp Factor	1.11

Electrolyte Temp. ºF	Electrolyte Temp. ºC	Cell Size Correction Factor	Electrolyte Temperature ºF	Electrolyte Temperature ºC	Cell Size Correction Factor
25	-3.9	1.52	80	25.7	0.98
30	-1.1	1.43	85	29.4	0.96
35	1.7	1.35	90	32.2	0.94
40	4.4	1.3	95	35	0.93
45	7.2	1.25	100	37.8	0.91
50	10	1.19	105	40.6	0.89
55	12.8	1.15	110	43.3	0.88
60	15.6	1.11	115	45.1	0.87
65	18.3	1.08	120	48.9	0.86
70	21.1	1.04	125	51.7	0.85
77	25	1			

Mesa Associates, Inc.
Engineers & Consultants
10604 Murdock Drive
Knoxville, TN 37932
(865) 671-5400

CALCULATION SHEET

Client/job	CORED Substation 300 Battery Study		
Mesa Task #	1330500		
Calculated by:	Mandy Elgan	Date:	6/2/2014
Checked by:	Keith Hurst	Date:	3/10/2015

5.0 Computation & Analysis

5.1 Existing Loads

5.1.1 Continuous Loads

5.1.1.1

Determine the amount of current constantly connected and energized, such as lights, digital relays, RTUs, power supplies, etc.

5.1.1.2 Continuous Load Data

Set 1

Device	Desc	Quantity	Amps ea.	Total Amps
(50/51) Phase Overcurrent	CRM 077-08AA	12	0.0416	0.4992
(50N) Ground Overcurrent	CRM 077-016FU	3	0.0416	0.1248
(64N) Neutral Overcurrent	GEC MCGG 22	5	0.0416	0.208
(87) Differential Relay	GEC MCGG 22	3	0.06	0.18
S.C.I. JEM-2	GEC MCGG 22	4	0.0012	0.0048
Time Delay (62)		2	0.166	0.332
Battery UV Trip (80)	AG 7012NF	1	0.066	0.066
Green Indicating Light	GE 1ZNGV17A3F	5	0.02	0.1
Red Indicating Light	ET-16	4	0.02	0.08

5.1.1.3 **Total Continuous Load** **1.595 A**

5.1.1.4 Continuous loads from battery charger inspection during site visit **1 A**

5.1.1.5

For an existing Station, the measured continuous load in line 5.1.1.4 can be used for documenting changes to the calculated continuous load. Assumptions must be attached to this calculation as to how the actual measured current affects the component calculation method, and while the calculated continuous load is being adjusted. When using the value from the Battery Reports, one must ensure all equipment is operating and the charger is not in the equalizing mode.

Mesa Associates, Inc.
Engineers & Consultants
10604 Murdock Drive
Knoxville, TN 37932
(865) 671-5400

CALCULATION SHEET

Client/job	CORED Substation 300 Battery Study		
Mesa Task #	1330500		
Calculated by:	Mandy Elgan	Date:	6/2/2014
Checked by:	Keith Hurst	Date:	3/10/2015

5.1.2 Non-Continuous Loads

5.1.2.1 Determine the maximum number of breakers that are likely to trip at one time such as Breaker Failure or Bus Differential. When calculating the total trip current, remember that every breaker may have a different tripping current and/or DC charging motor. Per IEEE Std. 485, "Although momentary loads may exist for only a fraction of a second, each is considered to last for a full minute because the instantaneous battery voltage drop for a given momentary load is essentially the same as the voltage drop after one minute".

5.1.2.2 Non-Continuous Load Data

Device		Quantity	Amps ea.	Total Amps
Trip Coil		4	16	64
Annunciator Relay		12	0.0625	0.75
BF LO Relay Electroswitch 7825DD		1	3.7	3.7

5.1.2.3 Total Non-Continuous Load **68.45**

5.1.2.4 Analyze the station and determine if any breakers use a DC closing solenoid or a DC powered switch. These devices can draw a great many amps and may exceed the value calculated in line 5.1.2.3. If more than one of these devices is present, then select the unit with the largest current requirement.

5.1.2.5 Close Breaker or Switch current draw 4.6

5.1.2.6 Total Non-continuous Load 68.45

5.1.3 Random Loads

5.1.3.1 This section calculates the loads that occur at random times, such as emergency pumps, heaters, etc.

5.1.3.2 Random Load Data

Device	Desc	Quantity	Amps ea.	Total Amps
	N/A			0

5.1.3.3 Total Random Loads 0

Mesa Associates, Inc.
Engineers & Consultants
10604 Murdock Drive
Knoxville, TN 37932
(865) 671-5400

CALCULATION SHEET

Client/job	CORED Substation 300 Battery Study		
Mesa Task #	1330500		
Calculated by:	Mandy Elgan	Date:	6/2/2014
Checked by:	Keith Hurst	Date:	3/10/2015

5.2 Future Loads

5.2.1 Future Continuous Loads

5.2.1.1

Determine the amount of current constantly connected and energized such as lights, digital relays, RTUs, power supplies, etc.

5.2.1.2 Future Continuous Load Data

Device	Desc	Quantity	Amps ea.	Total Amps
	SCADA System	1	3	3
	FO Dead-End or Head-End Boxes	1	5	5
OR	Repeater or Small Mesh Antennae	1	3	3

5.2.1.3 Total Future Cont. Load 8

5.2.2 Non-Continuous Loads

5.2.2.1 Determine the maximum number of breakers that are likely to trip at one time such as Breaker Failure or Bus Differential. When calculating the total trip current, remember that every breaker may have a different tripping current and/or DC charging motor. Per IEEE Std. 485, "Although momentary loads may exist for only a fraction of a second, each is considered to last for a full minute because the instantaneous battery voltage drop for a given momentary load is essentially the same as the voltage drop after one minute".

5.2.2.2 Future Non-Continuous Load Data

Device	Desc	Quantity	Amps ea.	Total Amps
N/A				

5.2.2.3 Total Future NonCont. Load 0

5.2.2.4 Analyze the future station plans and determine if any breakers use a DC closing solenoid or a DC powered switch. These devices can draw a great many amps and may exceed the value calculated in line 5.1.2.3. If more than one of these devices is present, then select the unit with the largest current requirement.

5.2.2.5 Future Close Breaker or SW Current draw 0

5.2.2.6 Future Total Non-continuous Load 0
(Larger of lines 5.2.2.3 or 5.2.2.5)

5.2.3 Random Loads

5.2.3.1 This section calculates the loads that occur at random times, such as emergency pumps, heaters, etc.

5.1.3.2 Future Random Load Data

Device	Desc	Quantity	Amps ea.	Total Amps
N/A				0

5.2.3.3 Total Future Random Loads 0

Mesa Associates, Inc.
Engineers & Consultants
10604 Murdock Drive
Knoxville, TN 37932
(865) 671-5400

CALCULATION SHEET

Client/job	CORED Substation 300 Battery Study
Mesa Task #	1330500
Calculated by:	Mandy Elgan — Date: 6/2/2014
Checked by:	Keith Hurst — Date: 3/10/2015

5.3 Total Load Data		Set 1
5.3.1	**Total Continuous Loads**	**9.600**
5.3.2	Total Non Continuous Loads (trip)	68.45
5.3.3	Largest Close or SW current draw (Larger of 5.1.2.5 or 5.2.2.5)	4.6
5.3.4	**Total Non Continuous Loads (trip)** (Larger of 5.3.2 or 5.3.3)	**68.45**
5.3.5	**Total Random Loads**	**0**

Set 1	Description	Amps	Duration (Min)
Section 1	Total Continuous Loads	9.600	480
Section 2	Total Continuous Loads + Total Non-Continuous Loads	78.050	1

(Calculation below was completed using C&D Battery Sizing Software)

Load Period	Load (amperes)	Change in Load (amperes) + Values	Change in Load (amperes) - Values	Duration of Load Period (minutes)	Time To End of Section (minutes)	Capacity Amperes per Pos Plates	Required Section Cell Size Positive Plates + Values	Required Section Cell Size Positive Plates - Values
SECTION 1								
1	9.600	9.600		480	480	6.2	1.549	
						SECTION 1 TOTAL :	**1.549**	
SECTION 2								
1	9.600	9.600		480	481	6.19	1.552	
2	78.050	68.450		1	1	71.86	0.953	
						SECTION 2 TOTAL :	**2.505**	
RANDOM EQUIPMENT LOADS								
	0							

number obtained via C&D data

Maximum Size: 2.50 **+ Random Load Size:** 0.00 **= Base Design Size:** 2.50

X Temperature Correction: 1.11
X Design Margin: 1.10
X Aging Factor: 1.25
= Number of Positive Plates: 3.82

Cell Model: C&D 3DJ-200 or Equivalent **Nominal AH Rating: 200** **8 Hr Rating: 25**

Positive Plates: 4 **Strings Per System: 1** **Cell per Jar: 3**

5.4 Methodology & Recommendation

5.5.1 Methodology

The above calculation is based on a duty cycle of two distinct periods. The first period is the constant draw of the continuous current while the station is without an AC feed. We have assumed worst case. We have used an eight (8) hour period of time for this section as this has typically been used in the industry. Also, this period has the most affect on this type of battery and produces the most losses

The next period includes all the continuous currents plus the current need to trip four breakers, one lockout relay, and Annunciator. This would be the scenario for a future design with a bus diff, which has a higher non-continuous load than the current design breaker failure, and all would occur within a minute of duration.

5.4.2 Recommendation

Mesa Associates recommends one sets of C&D 3DJ-200 or equivalent batteries. This battery will supply all needs for the existing configuration and be adequate for future build out of the communications system.

5.5 Battery Fault Current

Per IEEE, the maximum fault current a battery can produce is generally eight to ten times the one minute rating of the battery system. In the absence of exact data from the manufacturer, we will assume worst case and use ten times one minute rating. This should be used to size protective devices.

One minute rating of the battery system	287.4	(from C&D literature)
5.5.1 Maximum DC Fault Current Available	2874	

5.6 Charger Selection

5.5.1 Charger output=continuous load + ((1.1*8hr rating of battery)/hours to recharge) per IEEE

5.5.2	Total Continuous Loads	9.600
5.5.3	8 Hour Rating of Battery	25
5.5.4	Hours to Recharge	8
5.5.5	Required Charger Output	13.04

5.5.6 Battery Charger Recommendation

IEEE recommends time for recharge between 8 and 12 hours. Mesa also recommends standardizing sizes where possible with a minimum size of 20 amps, Universal input voltage, DNP 3.0 communications, and relay alarm outputs. Using this logic, a **Lamarche A75DE-20-48V-ABD-1-24L-46R-21P** charger (or equivalent) would be required. This model would include an input voltage of 240Vac and an output of 48Vdc and 20Adc, communications capability, and alarm relays. The total continuous current used in this calculation includes adequate capacity to allow for future build out.

Mesa Associates, Inc.
Engineers & Consultants
10604 Murdock Drive
Knoxville, TN 37932
(865) 671-5400

CALCULATION SHEET

Client/job	CORED Substation 300 Battery Study
Mesa Task #	1330500
Calculated by:	Mandy Elgan — Date: 6/2/2014
Checked by:	Keith Hurst — Date: 3/10/2015

6.0 Room Exhaust

5.1 Assumptions

5.1.1 Lead acid batteries produce 0.016 cubic feet of hydrogen per cell, per hour at standard pressure.

5.1.2 Percent of overcharge assumed during recharge is 20%

5.2 Calculate Hydrogen Concentration

Hydrogen Concentration	H =	3.84
H = ((C X O X G X A) / R) / 100		
C = number of cells		24
O = percent of overcharge assumed during recharge, use 20% (20)		20
G = Volume of hydrogen produced by one amp of charge. Use (0.016)		0.016
A = 8-hour rated capacity of battery in amp hours		200
R = Assume gas is released during last (4) hours of 8 hour charge		4

5.3 Calculate Room Volume

Room Volume	V =	937.13
W x L x H		
W = Width		10.5
L = Length		10.5
H = Height		8.5

5.4 Ventilation Requirement

Ventilation Requirement	=	146.43	
V = R x P / H x 60 mins			
R = Room cu. ft.		937.13	
P = Max percentage of hydrogen gas allowed		0.01	
H = Total hydrogen produced per hour		3.84	

5.5 Fan Requirement

Fan Requirement	=	384	cu ft per hour
Fan Size = R x 60 / V			
R = Room cu.ft.		937.13	
V = Ventilation req'd		146.43	
	or	**6.4 CFM**	
Exising Fan rated (conservative assmption)		100 **cfm**	
Set existing fan to run minutes per hour		4 **Minutes/Hour**	

C&D TECHNOLOGIES, INC.
1400 UNION MEETING ROAD
BLUE BELL, PA 19422-0858
(215) 619-2700
FAX: (215) 619-7840

Title:	CORED Battery Study
Company:	CORED
Sized By:	Clifford Hurst
Date:	Wednesday, April 01, 2015
Reference No.:	Sub 400

Key Parameters:		Parallel Strings:	1
Number of Cells:	24	Minimum Temp:	60.0 F
Number of Jars:	8	Design Margin:	1.10
Cell Final Voltage:	1.75 vDC	Aging Factor:	1.25

Load Information

Profile:	Step Load	
	Load (amps)	Time (min)
Period 1	9.6	480
Period 2	78.05	1
Total Time:	8 hr. 1 min.	
AH Removed	78.10	
Random Load:	n/a	
Duration:	n/a	

Battery:

Model:	3DJ-200
Specific Gravity:	1.215
Type:	Flooded 20 year
Product Line:	DJ
Selection Criteria:	By Battery Type - Flooded 20 year
% of Requirement:	104.64 %
Number of Jars:	8
Jar Length:	8.09 in.
Jar Width:	13.58 in.
Jar Height:	15.22 in.
No. Plates:	9
Float vpc:	2.21 vDC
Max vpc:	2.33 vDC
Jar Weight:	139.00 lbs.
Battery Weight:	1,112.00 lbs.

The C&D Sizing Program adheres to the battery sizing methodologies found in the current versions of IEEE-485, Practice for Sizing Lead Acid Batteries for Stationery Applications and IEEE1184, Guide for Selection/Sizing of Batteries for Uninterruptible Power Systems

Battery Rack:

	Rack 1
Qty:	1
Model:	RDB0800-06EP1P
Drawing No.:	M-11414
Style:	1 Tier
Rails:	Powder Coated 'Painted' Rail
Rating:	EP1
Length:	6.00 Ft.
Width:	18.19 in.
Height:	16.69 in.

Per Rack Section

Rack Area:	9.10 sq. Ft.
Rack Weight:	97.00 lbs.

Per Battery String

Utilization:	95.44 %
Rack Area:	9.10 sq. Ft.
Rack Weight:	97.00 lbs.

FORM # BSP-A3 REV DATE 06/18/02

Wednesday, April 01, 2015

© 2015 C&D Technologies, Inc.

All critical calculations must be verified with C&D applications.
Specifications are subject to change without notice.

C&D TECHNOLOGIES, INC.
1400 UNION MEETING ROAD
BLUE BELL, PA 19422-0858
(215) 619-2700
FAX: (215) 619-7840

COMPANY: CORED
REF: Sub 400

DATE: 4/1/2015
SIZED BY: Clifford Hurst
IEEE STD.: 485-2010

LOWEST DESIGN TEMPERATURE	60.0 F	MINIMUM DESIGN CELL VOLTAGE	1.75	SIZING BASIS PLATE NOMENCLATURE	DJ

Load Period	Load (amperes)	Change in Load (amperes)		Duration of Load Period (minutes)	Time to End of Section (minutes)	Capacity Amperes per Pos. Plate	Required Section Cell Size Positive Plates	
		+ Values	- Values				+ Values	- Values
SECTION 1								
1	9.60	9.60		480	480	6.20	1.549	
						SECTION 1 TOTAL:	1.549	
SECTION 2								
1	9.60	9.60		480	481	6.19	1.552	
2	78.05	68.45		1	1	71.86	0.953	
						SECTION 2 TOTAL:	2.504	

MAXIMUM SELECTED SIZE	2.50	+ RANDOM LOAD SIZE	0.00	= Base Design Size	2.50
		BASE DESIGN MULTIPLIERS		X Temperature Correction	1.110
				X Design Margin	1.10
				X Aging Factor	1.25
				= NUMBER OF POSITIVE PLATE	3.82
POSITIVE PLATES	4	Strings per System	1	Cell Model	3DJ-200
				CELLS PER JAR	3

FORM # BSP-A1 REV DATE 3/21/05

Wednesday, April 01, 2015

© 2015 C&D Technologies, Inc.
All critical calculations must be verified with C&D applications.
Specifications are subject to change without notice.

Mesa Associates, Inc.
Engineers & Consultants
10604 Murdock Drive
Knoxville, TN 37932
(865) 671-5400

CALCULATION SHEET

Client/job	CORED Substation 400 Battery Study
Mesa Task #	1330500
Calculated by:	Mandy Elgan — Date: 6/2/2014
Checked by:	Keith Hurst — Date: 3/10/2015

1.0 PURPOSE

The purpose of the calculation is to size the substation battery and battery charger. The methodology is supported by IEEE Standard 485, "Recommended Practice for Sizing Lead Acid Batteries for Stationary Applications". The IEEE method is designed to cover continuous, non-continuous, and random loads.

2.0 SCOPE

This calculation documents the DC load requirements and verifies that the 48VDC battery and its charger capacity are not exceeded. This calculation will document the continuous loads, non-continuous loads, random loads, and the periods of operation. The required capacity of the charger will be determined using the IEEE-485 calculation method. The results of this calculation will identify the size and type of battery and battery charger required.

2.1 The Amp/Positive plate calculation method will be used.
2.2 A 1.10 design margin is used for unexpected load growth.
2.3 An aging factor of 1.25 will be used for battery decay to ensure a full life of the battery.
2.4 The minimum battery voltage for 48VDC system is 42 Volts.
2.5 The maximum battery voltage for 48VDC system is 54 Volts.

3.0 References

Single Line Diagram(s)
Relay Panel Front View(s)
Site Visit Notes and Photos

4.0 Design Input

Number of Cells	24
Design Margin	1.10
Aging Factor	1.25
Ambient Temp	60
Temp Factor	1.11

Electrolyte Temp. ºF	Electrolyte Temp. ºC	Cell Size Correction Factor	Electrolyte Temperature ºF	Electrolyte Temperature ºC	Cell Size Correction Factor
25	-3.9	1.52	80	26.7	0.98
30	-1.1	1.43	85	29.4	0.96
35	1.7	1.35	90	32.2	0.94
40	4.4	1.3	95	35	0.93
45	7.2	1.25	100	37.8	0.91
50	10	1.19	105	40.6	0.89
55	12.8	1.15	110	43.3	0.88
60	15.6	1.11	115	46.1	0.87
65	18.3	1.08	120	48.9	0.86
70	21.1	1.04	125	51.7	0.85
77	25	1			

Mesa Associates, Inc.
Engineers & Consultants
10604 Murdock Drive
Knoxville, TN 37932
(865) 671-5400

CALCULATION SHEET

Client/job	CORED Substation 400 Battery Study		
Mesa Task #	1330500		
Calculated by:	Mandy Elgan	Date:	6/2/2014
Checked by:	Keith Hurst	Date:	3/10/2015

5.0 Computation & Analysis

5.1 Existing Loads

5.1.1 Continuous Loads

5.1.1.1

Determine the amount of current constantly connected and energized, such as lights, digital relays, RTUs, power supplies, etc.

5.1.1.2 Continuous Load Data

Set 1

Device	Desc	Quantity	Amps ea.	Total Amps
(50/51) Phase Overcurrent	CRM 077-08AA	12	0.0416	0.4992
(50N) Ground Overcurrent	CRM 077-016FU	3	0.0416	0.1248
(64N) Neutral Overcurrent	GEC MCGG 22	5	0.0416	0.208
(87) Differential Relay	GEC MCGG 22	3	0.06	0.18
S.C.I. JEM-2	GEC MCGG 22	4	0.0012	0.0048
Time Delay (62)		2	0.166	0.332
Battery UV Trip (80)	AG 7012NF	1	0.066	0.066
Green Indicating Light	GE 1ZNGV17A3F	5	0.02	0.1
Red Indicating Light	ET-16	4	0.02	0.08

5.1.1.3 **Total Continuous Load** **1.595 A**

5.1.1.4 Continuous loads from battery charger inspection during site visit **1 A**

5.1.1.5

For an existing Station, the measured continuous load in line 6.1.1.4 can be used for documenting changes to the calculated continuous load. Assumptions must be attached to this calculation as to how the actual measured current affects the component calculation method, and while the calculated continuous load is being adjusted. When using the value from the Battery Reports, one must ensure all equipment is operating and the charger is not in the equalizing mode.

Mesa Associates, Inc.
Engineers & Consultants
10604 Murdock Drive
Knoxville, TN 37932
(865) 671-5400

CALCULATION SHEET

Client/job	CORED Substation 400 Battery Study		
Mesa Task #	1330500		
Calculated by:	Mandy Elgan	Date:	6/2/2014
Checked by:	Keith Hurst	Date:	3/10/2015

5.1.2 Non-Continuous Loads

5.1.2.1 Determine the maximum number of breakers that are likely to trip at one time such as Breaker Failure or Bus Differential. When calculating the total trip current, remember that every breaker may have a different tripping current and/or DC charging motor. Per IEEE Std. 485, "Although momentary loads may exist for only a fraction of a second, each is considered to last for a full minute because the instantaneous battery voltage drop for a given momentary load is essentially the same as the voltage drop after one minute".

5.1.2.2 Non-Continuous Load Data

Device		Quantity	Amps ea.	Total Amps
Trip Coil		4	16	64
Annunciator Relay		12	0.0625	0.75
BF LO Relay Electroswitch 7825DD		1	3.7	3.7

5.1.2.3 Total Non-Continuous Load **68.45**

5.1.2.4 Analyze the station and determine if any breakers use a DC closing solenoid or a DC powered switch. These devices can draw a great many amps and may exceed the value calculated in line 6.1.2.3. If more than one of these devices is present, then select the unit with the largest current requirement.

5.1.2.5 Close Breaker or Switch current draw 4.6

5.1.2.6 Total Non-continuous Load 68.45

5.1.3 Random Loads

5.1.3.1 This section calculates the loads that occur at random times, such as emergency pumps, heaters, etc

5.1.3.2 Random Load Data

Device	Desc	Quantity	Amps ea.	Total Amps
	N/A			0

5.1.3.3 Total Random Loads 0

Mesa Associates, Inc.
Engineers & Consultants
10604 Murdock Drive
Knoxville, TN 37932
(865) 671-5400

CALCULATION SHEET

Client/job	CORED Substation 400 Battery Study
Mesa Task #	1330500
Calculated by:	Mandy Elgan — Date: 6/2/2014
Checked by:	Keith Hurst — Date: 3/10/2015

5.2 Future Loads

5.2.1 Future Continuous Loads

5.2.1.1

Determine the amount of current constantly connected and energized such as lights, digital relays, RTUs, power supplies, etc.

5.2.1.2 Future Continuous Load Data

Device	Desc	Quantity	Amps ea.	Total Amps
	SCADA System	1	3	3
	FO Dead-End or Head-End Boxes	1	5	5
OR	Repeater or Small Mesh Antennae	1	3	3

5.2.1.3 Total Future Cont. Load 8

5.2.2 Non-Continuous Loads

5.2.2.1 Determine the maximum number of breakers that are likely to trip at one time such as Breaker Failure or Bus Differential. When calculating the total trip current, remember that every breaker may have a different tripping current and/or DC charging motor. Per IEEE Std. 485, "Although momentary loads may exist for only a fraction of a second, each is considered to last for a full minute because the instantaneous battery voltage drop for a given momentary load is essentially the same as the voltage drop after one minute".

5.2.2.2 Future Non-Continuous Load Data

Device	Desc	Quantity	Amps ea.	Total Amps
N/A				

5.2.2.3 Total Future NonCont. Load 0

5.2.2.4 Analyze the future station plans and determine if any breakers use a DC closing solenoid or a DC powered switch. These devices can draw a great many amps and may exceed the value calculated in line 6.1.2.3. If more than one of these devices is present, then select the unit with the largest current requirement.

5.2.2.5 Future Close Breaker or SW Current draw 0

5.2.2.6 Future Total Non-continuous Load 0
(Larger of lines 6.2.2.3 or 6.2.2.5)

5.2.3 Random Loads

5.2.3.1 This section calculates the loads that occur at random times, such as emergency pumps, heaters, etc.

5.1.3.2 Future Random Load Data

Device	Desc	Quantity	Amps ea.	Total Amps
N/A				0

5.2.3.3 Total Future Random Loads 0

Mesa Associates, Inc.
Engineers & Consultants
10604 Murdock Drive
Knoxville, TN 37932
(865) 671-5400

CALCULATION SHEET

Client/job	CORED Substation 400 Battery Study
Mesa Task #	1330500
Calculated by:	Mandy Elgan — Date: 6/2/2014
Checked by:	Keith Hurst — Date: 3/10/2015

5.3 Total Load Data		Set 1
5.3.1	**Total Continuous Loads**	**9.600**
5.3.2	Total Non Continuous Loads (trip)	68.45
5.3.3	Largest Close or SW current draw (Larger of 6.1.2.5 or 6.2.2.5)	4.6
5.3.4	**Total Non Continuous Loads (trip)** (Larger of 6.3.2 or 6.3.3)	**68.45**
5.3.5	**Total Random Loads**	**0**

Set 1	Description	Amps	Duration (Min)
Section 1	Total Continuous Loads	9.600	480
Section 2	Total Continuous Loads + Total Non-Continuous Loads	78.050	1

(Calculation below was completed using C&D Battery Sizing Software)

Load Period	Load (amperes)	Change in Load (amperes) + Values	Change in Load (amperes) - Values	Duration of Load Period (minutes)	Time To End of Section (minutes)	Capacity Amperes per Pos Plates	Required Section Cell Size Positive Plates + Values	Required Section Cell Size Positive Plates - Values
SECTION 1								
1	9.600	9.600		480	480	6.2	1.549	
						SECTION 1 TOTAL :	**1.549**	
SECTION 2								
1	9.600	9.600		480	481	6.19	1.552	
2	78.050	68.450		1	1	71.86	0.953	
						SECTION 2 TOTAL :	**2.505**	
RANDOM EQUIPMENT LOADS								
	0							

number obtained via C&D data

Maximum Size: 2.50 **+ Random Load Size:** 0.00 **= Base Design Size:** 2.50

X Temperature Correction: 1.11
X Design Margin: 1.10
X Aging Factor: 1.25
= Number of Positive Plates: 3.82

Cell Model: C&D 3DJ-200 or Equivalent **Nominal AH Rating: 200** **8 Hr Rating: 25**

Positive Plates: 4 **Strings Per System: 1** **Cell per Jar: 3**

Mesa Associates, Inc.
Engineers & Consultants
10604 Murdock Drive
Knoxville, TN 37932
(865) 671-5400

CALCULATION SHEET

Client/job	CORED Substation 400 Battery Study		
Mesa Task #	1330500		
Calculated by:	Mandy Elgan	Date:	6/2/2014
Checked by:	Keith Hurst	Date:	3/10/2015

5.4 Methodology & Recommendation

5.5.1 Methodology

The above calculation is based on a duty cycle of two distinct periods. The first period is the constant draw of the continuous current while the station is without an AC feed. We have assumed worst case. We have used an eight (8) hour period of time for this section as this has typically been used in the industry. Also, this period has the most affect on this type of battery and produces the most losses

The next period includes all the continuous currents plus the current need to trip four breakers, one lockout relay, and Annunciator. This would be the scenario for a future design with a bus diff, which has a higher non-continuous load than the current design breaker failure, and all would occur within a minute of duration.

5.4.2 Recommendation

Mesa Associates recommends one sets of C&D 3DJ-200 or equivalent batteries. This battery will supply all needs for the existing configuration and be adequate for future build out of the communications system.

5.5 Battery Fault Current

Per IEEE, the maximum fault current a battery can produce is generally eight to ten times the one minute rating of the battery system. In the absence of exact data from the manufacturer, we will assume worst case and use ten times one minute rating. This should be used to size protective devices.

One minute rating of the battery system	287.4	(from C&D literature)
6.5.1 Maximum DC Fault Current Available	2874	

5.6 Charger Selection

5.5.1 Charger output=continuous load + ((1.1*8hr rating of battery)/hours to recharge) per IEEE

5.5.2	Total Continuous Loads	9.600
5.5.3	8 Hour Rating of Battery	25
5.5.4	Hours to Recharge	8
5.5.5	Required Charger Output	13.04

5.5.6 Battery Charger Recommendation

IEEE recommends time for recharge between 8 and 12 hours. Mesa also recommends standardizing sizes where possible with a minimum size of 20 amps, Universal input voltage, DNP 3.0 communications, and relay alarm outputs. Using this logic, a **Lamarche A75DE-20-48V-ABD-1-24L-46R-21P** charger (or equivalent) would be required. This model would include an input voltage of 240Vac and an output of 48Vdc and 20Adc, communications capability, and alarm relays. The total continuous current used in this calculation includes adequate capacity to allow for future build out.

Mesa Associates, Inc.
Engineers & Consultants
10604 Murdock Drive
Knoxville, TN 37932
(865) 671-5400

CALCULATION SHEET

Client/job	CORED Substation 400 Battery Study
Mesa Task #	1330500
Calculated by:	Mandy Elgan — Date: 6/2/2014
Checked by:	Keith Hurst — Date: 3/10/2015

6.0 Room Exhaust

6.1 Assumptions

6.1.1 Lead acid batteries produce 0.016 cubic feet of hydrogen per cell, per hour at standard pressure

6.1.2 Percent of overcharge assumed during recharge is 20%

6.2 Calculate Hydrogen Concentration

Hydrogen Concentration	H =	3.84
H = ((C X O X G X A) / R) / 100		
C = number of cells		24
O = percent of overcharge assumed during recharge, use 20% (20)		20
G = Volume of hydrogen produced by one amp of charge. Use (0.016)		0.016
A = 8-hour rated capacity of battery in amp hours		200
R = Assume gas is released during last (4) hours of 8 hour charge		4

6.3 Calculate Room Volume

Room Volume	V =	1115.63
W x L x H		
W = Width		12.5
L = Length		10.5
H = Height		8.5

6.4 Ventilation Requirement

Ventilation Requirement	=	174.32	
V = R x P / H x 60 mins			
R = Room cu. ft.		1115.625	
P = Max percentage of hydrogen gas allowed		0.01	
H = Total hydrogen produced per hour		3.84	

6.5 Fan Requirement

Fan Requirement	=	384	cu ft per hour
Fan Size = R x 60 / V			
R = Room cu.ft.		1115.625	
V = Ventilation req'd		174.3164063	
	or		**6.4 CFM**
Exising Fan rated (conservative assmption)		100	**cfm**
Set existing fan to run minutes per hour		4	**Minutes/Hour**

C&D TECHNOLOGIES, INC.
1400 UNION MEETING ROAD
BLUE BELL, PA 19422-0858
(215) 619-2700
FAX: (215) 619-7840

Title:	CORED Battery Study
Company:	CORED
Sized By:	Clifford Hurst
Date:	Wednesday, April 01, 2015
Reference No.:	Sub 500

Key Parameters:		Parallel Strings:	1
Number of Cells:	24	Minimum Temp:	60.0 F
Number of Jars:	8	Design Margin:	1.10
Cell Final Voltage:	1.75 vDC	Aging Factor:	1.25

Load Information

Profile:	Step Load	
	Load (amps)	Time (min)
Period 1	9.5	480
Period 2	49.65	1
Total Time:	8 hr. 1 min.	
AH Removed	76.83	
Random Load:	n/a	
Duration:	n/a	

Battery:

Model:	3DJ-200
Specific Gravity:	1.215
Type:	Flooded 20 year
Product Line:	DJ
Selection Criteria:	By Battery Type - Flooded 20 year
% of Requirement:	125.13 %
Number of Jars:	8
Jar Length:	8.09 in.
Jar Width:	13.58 in.
Jar Height:	15.22 in.
No. Plates:	9
Float vpc:	2.21 vDC
Max vpc:	2.33 vDC
Jar Weight:	139.00 lbs.
Battery Weight:	1,112.00 lbs.

The C&D Sizing Program adheres to the battery sizing methodologies found in the current versions of IEEE-485, Practice for Sizing Lead Acid Batteries for Stationery Applications and IEEE1184, Guide for Selection/Sizing of Batteries for Uninterruptible Power Systems

Battery Rack:

	Rack 1
Qty:	1
Model:	RDB0800-06EP1P
Drawing No.:	M-11414
Style:	1 Tier
Rails:	Powder Coated 'Painted' Rail
Rating:	EP1
Length:	6.00 Ft.
Width:	18.19 in.
Height:	16.69 in.

Per Rack Section

Rack Area:	9.10 sq. Ft.
Rack Weight:	97.00 lbs.

Per Battery String

Utilization:	95.44 %
Rack Area:	9.10 sq. Ft.
Rack Weight:	97.00 lbs.

FORM # BSP-A3 REV DATE 06/18/02

Wednesday, April 01, 2015

© 2015 C&D Technologies, Inc.

All critical calculations must be verified with C&D applications.
Specifications are subject to change without notice.

C&D TECHNOLOGIES, INC.
1400 UNION MEETING ROAD
BLUE BELL, PA 19422-0858
(215) 619-2700
FAX: (215) 619-7840

COMPANY: CORED
REF: Sub 500

DATE: 4/1/2015
SIZED BY: Clifford Hurst
IEEE STD.: 485-2010

LOWEST DESIGN TEMPERATURE	60.0 F	MINIMUM DESIGN CELL VOLTAGE	1.75	SIZING BASIS PLATE NOMENCLATURE	DJ

Load Period	Load (amperes)	Change in Load (amperes)		Duration of Load Period (minutes)	Time to End of Section (minutes)	Capacity Amperes per Pos. Plate	Required Section Cell Size Positive Plates	
		+ Values	- Values				+ Values	- Values
SECTION 1								
1	9.50	9.50		480	480	6.20	1.533	
						SECTION 1 TOTAL:	1.533	
SECTION 2								
1	9.50	9.50		480	481	6.19	1.536	
2	49.65	40.15		1	1	71.86	0.559	
						SECTION 2 TOTAL:	2.094	

MAXIMUM SELECTED SIZE	2.09	+ RANDOM LOAD SIZE	0.00	= Base Design Size	2.09
		BASE DESIGN MULTIPLIERS		X Temperature Correction	1.110
				X Design Margin	1.10
				X Aging Factor	1.25
				= NUMBER OF POSITIVE PLATE	3.20
POSITIVE PLATES	4	Strings per System	1	Cell Model	3DJ-200
				CELLS PER JAR	3

FORM # BSP-A1 REV DATE 3/21/05

Wednesday, April 01, 2015

© 2015 C&D Technologies, Inc.
All critical calculations must be verified with C&D applications.
Specifications are subject to change without notice.

Mesa Associates, Inc.
Engineers & Consultants
10604 Murdock Drive
Knoxville, TN 37932
(865) 671-5400

CALCULATION SHEET

Client/job	CORED Substation 500 Battery Study
Mesa Task #	1330500
Calculated by:	Mandy Elgan — Date: 6/17/2014
Checked by:	Keith Hurst — Date: 3/10/2015

1.0 Purpose

The purpose of the calculation is to size the substation battery and battery charger. The methodology is supported by IEEE Standard 485, "Recommended Practice for Sizing Lead Acid Batteries for Stationary Applications". The IEEE method is designed to cover continuous, non-continuous, and random loads.

2.0 Scope

This calculation documents the DC load requirements and verifies that the 48VDC battery and its charger capacity are not exceeded. This calculation will document the continuous loads, non-continuous loads, random loads, and the periods of operation. The required capacity of the charger will be determined using the IEEE-485 calculation method. The results of this calculation will identify the size and type of battery and battery charger required.

3.1 The Amp/Positive plate calculation method will be used.
3.2 A 1.10 design margin is used for unexpected load growth.
3.3 An aging factor of 1.25 will be used for battery decay to ensure a full life of the battery.
3.4 The minimum battery voltage for 48VDC system is 42 Volts.
3.5 The maximum battery voltage for 48VDC system is 54 Volts.

3.0 References

Single Line Diagram(s)
Relay Panel Front View(s)
Site Visit Notes and Photos

4.0 Design Input

Number of Cells	24
Design Margin	1.10
Aging Factor	1.25
Ambient Temp	60
Temp Factor	1.11

Electrolyte Temp. ºF	Electrolyte Temp. ºC	Cell Size Correction Factor	Electrolyte Temperature ºF	Electrolyte Temperature ºC	Cell Size Correction Factor
25	-3.9	1.52	80	26.7	0.98
30	-1.1	1.43	85	29.4	0.96
35	1.7	1.35	90	32.2	0.94
40	4.4	1.3	95	35	0.93
45	7.2	1.25	100	37.8	0.91
50	10	1.19	105	40.6	0.89
55	12.8	1.15	110	43.3	0.88
60	15.6	1.11	115	46.1	0.87
65	18.3	1.08	120	48.9	0.86
70	21.1	1.04	125	51.7	0.85
77	25	1			

Mesa Associates, Inc.
Engineers & Consultants
10604 Murdock Drive
Knoxville, TN 37932
(865) 671-5400

CALCULATION SHEET

Client/job	CORED Substation 500 Battery Study		
Mesa Task #	1330500		
Calculated by:	Mandy Elgan	Date:	6/17/2014
Checked by:	Keith Hurst	Date:	3/10/2015

5.0 Computation & Analysis

5.1 Existing Loads

5.1.1 Continuous Loads

5.1.1.1

Determine the amount of current constantly connected and energized, such as lights, digital relays, RTUs, power supplies, etc.

5.1.1.2 Continuous Load Data

Set 1

Device	Desc	Quantity	Amps ea.	Total Amps
(50/51) Phase Overcurrent	GEC MCGG 22	6	0.0416	0.2496
(50N) Ground Overcurrent	GEC MCGG 22	4	0.0416	0.1664
(87) Differential Relay	MBCH	6	0.06	0.36
S.C.I. JEM-2	Meter	2	0.0012	0.0024
Time Delay (62)	AG 7012NF	3	0.166	0.498
Battery UV Trip (80)	GE 1ZNGV17A3F	1	0.066	0.066
Green Indicating Light	ET-16	4	0.02	0.08
Red Indicating Light	ET-16	2	0.02	0.04

5.1.1.3 **Total Continuous Load** **1.462 A**

5.1.1.4 Continuous loads from battery charger inspection during site visit **1 A**

5.1.1.5

For an existing Station, the measured continuous load in line 5.1.1.4 can be used for documenting changes to the calculated continuous load. Assumptions must be attached to this calculation as to how the actual measured current affects the component calculation method, and while the calculated continuous load is being adjusted. When using the value from the Battery Reports, one must ensure all equipment is operating and the charger is not in the equalizing mode.

Mesa Associates, Inc.
Engineers & Consultants
10604 Murdock Drive
Knoxville, TN 37932
(865) 671-5400

CALCULATION SHEET

Client/job	CORED Substation 500 Battery Study		
Mesa Task #	1330500		
Calculated by:	Mandy Elgan	Date:	6/17/2014
Checked by:	Keith Hurst	Date:	3/10/2015

5.1.2 Non-Continuous Loads

5.1.2.1 Determine the maximum number of breakers that are likely to trip at one time such as Breaker Failure or Bus Differential. When calculating the total trip current, remember that every breaker may have a different tripping current and/or DC charging motor. Per IEEE Std. 485, "Although momentary loads may exist for only a fraction of a second, each is considered to last for a full minute because the instantaneous battery voltage drop for a given momentary load is essentially the same as the voltage drop after one minute".

5.1.2.2 Non-Continuous Load Data

Device		Quantity	Amps ea.	Total Amps
Trip Coil		2	16	32
Annunciator Relay		12	0.0625	0.75
BF LO Relay Electroswitch 7825DD		2	3.7	7.4

5.1.2.3 Total Non-Continuous Load **40.15**

5.1.2.4 Analyze the station and determine if any breakers use a DC closing solenoid or a DC powered switch. These devices can draw a great many amps and may exceed the value calculated in line 5.1.2.3. If more than one of these devices is present, then select the unit with the largest current requirement.

5.1.2.5 Close Breaker or Switch current draw 4.6

5.1.2.6 Total Non-continuous Load 40.15

5.1.3 Random Loads

5.1.3.1 This section calculates the loads that occur at random times, such as emergency pumps, heaters, etc

5.1.3.2 Random Load Data

Device	Desc	Quantity	Amps ea.	Total Amps
	N/A			0

5.1.3.3 Total Random Loads 0

Mesa Associates, Inc.
Engineers & Consultants
10604 Murdock Drive
Knoxville, TN 37932
(865) 671-5400

CALCULATION SHEET

Client/job	CORED Substation 500 Battery Study
Mesa Task #	1330500
Calculated by:	Mandy Elgan — Date: 6/17/2014
Checked by:	Keith Hurst — Date: 3/10/2015

5.2 Future Loads

5.2.1 Future Continuous Loads

5.2.1.1

Determine the amount of current constantly connected and energized such as lights, digital relays, RTUs, power supplies, etc.

5.2.1.2 Future Continuous Load Data

Device	Desc	Quantity	Amps ea.	Total Amps
	SCADA System	1	3	3
	FO Dead-End or Head-End Boxes	1	5	5
OR	Repeater or Small Mesh Antennae	1	3	3

5.2.1.3 Total Future Cont. Load 8

5.2.2 Non-Continuous Loads

5.2.2.1 Determine the maximum number of breakers that are likely to trip at one time such as Breaker Failure or Bus Differential. When calculating the total trip current, remember that every breaker may have a different tripping current and/or DC charging motor. Per IEEE Std. 485, "Although momentary loads may exist for only a fraction of a second, each is considered to last for a full minute because the instantaneous battery voltage drop for a given momentary load is essentially the same as the voltage drop after one minute".

5.2.2.2 Future Non-Continuous Load Data

Device	Desc	Quantity	Amps ea.	Total Amps
	N/A			

5.2.2.3 Total Future NonCont. Load 0

5.2.2.4 Analyze the future station plans and determine if any breakers use a DC closing solenoid or a DC powered switch. These devices can draw a great many amps and may exceed the value calculated in line 5.1.2.3. If more than one of these devices is present, then select the unit with the largest current requirement.

5.2.2.5 Future Close Breaker or SW Current draw 0

5.2.2.6 Future Total Non-continuous Load 0
(Larger of lines 5.2.2.3 or 5.2.2.5)

5.2.3 Random Loads

5.2.3.1

This section calculates the loads that occur at random times, such as emergency pumps, heaters, etc

5.1.3.2 Future Random Load Data

Device	Desc	Quantity	Amps ea.	Total Amps
	N/A			0

5.2.3.3 Total Future Random Loads 0

Mesa Associates, Inc.
Engineers & Consultants
10604 Murdock Drive
Knoxville, TN 37932
(865) 671-5400

CALCULATION SHEET

Client/job	CORED Substation 500 Battery Study
Mesa Task #	1330500
Calculated by:	Mandy Elgan — Date: 6/17/2014
Checked by:	Keith Hurst — Date: 3/10/2015

5.3	Total Load Data	Set 1
5.3.1	**Total Continuous Loads**	**9.462**
5.3.2	Total Non Continuous Loads (trip)	40.15
5.3.3	Largest Close or SW current draw (Larger of 5.1.2.5 or 5.2.2.5)	4.6
5.3.4	**Total Non Continuous Loads (trip)** (Larger of 5.3.2 or 5.3.3)	**40.15**
5.3.5	**Total Random Loads**	**0**

Set 1	Description	Amps	Duration (Min)
Section 1	Total Continuous Loads	9.462	480
Section 2	Total Continuous Loads + Total Non-Continuous Loads	49.612	1

(Calculation below was completed using C&D Battery Sizing Software)

Load Period	Load (amperes)	Change in Load (amperes) + Values	Change in Load (amperes) - Values	Duration of Load Period (minutes)	Time To End of Section (minutes)	Capacity Amperes per Pos Plates	Required Section Cell Size Positive Plates + Values	Required Section Cell Size Positive Plates - Values
SECTION 1								
1	9.462	9.462		480	480	6.2	1.533	
						SECTION 1 TOTAL :	**1.533**	
SECTION 2								
1	9.462	9.462		480	481	6.19	1.536	
2	49.612	40.150		1	1	71.86	0.559	
						SECTION 2 TOTAL :	**2.095**	
RANDOM EQUIPMENT LOADS								
	0							

number obtained via C&D data

Maximum Size: 2.09 **+ Random Load Size:** 0.00 **= Base Design Size:** 2.09

X Temperature Correction: 1.11
X Design Margin: 1.10
X Aging Factor: 1.25
= Number of Positive Plates: 3.20

Cell Model: C&D 3DJ-200 or Equivalent **Nominal AH Rating: 200** **8 Hr Rating: 25**

Positive Plates: 4 **Strings Per System: 1** **Cell per Jar: 3**

5.4 Methodology & Recommendation

5.5.1 Methodology

The above calculation is based on a duty cycle of two distinct periods. The first period is the constant draw of the continuous current while the station is without an AC feed. We have assumed worst case. We have used an eight (8) hour period of time for this section as this has typically been used in the industry. Also, this period has the most affect on this type of battery and produces the most losses

The next period includes all the continuous currents plus the current need to trip two breakers, one lockout relay, and Annunciator. This would be the scenario for a future design with a bus diff, which has a higher non-continuous load than the current design breaker failure, and all would occur within a minute of duration.

5.4.2 Recommendation

Mesa Associates recommends one sets of C&D 3DJ-200 or equivalent batteries. This battery will supply all needs for the existing configuration and be adequate for future build out of the communications system.

5.5 Battery Fault Current

Per IEEE, the maximum fault current a battery can produce is generally eight to ten times the one minute rating of the battery system. In the absence of exact data from the manufacturer, we will assume worst case and use ten times one minute rating. This should be used to size protective devices.

One minute rating of the battery system	287.4	(from C&D literature)
5.5.1 Maximum DC Fault Current Available	2874	

5.6 Charger Selection

5.6.1 Charger output=continuous load + ((1.1*8hr rating of battery)/hours to recharge) per IEEE

5.6.2	Total Continuous Loads	9.462
5.6.3	8 Hour Rating of Battery	25
5.6.4	Hours to Recharge	8
5.6.5	Required Charger Output	12.90

5.6.6 Battery Charger Recommendation

IEEE recommends time for recharge between 8 and 12 hours. Mesa also recommends standardizing sizes where possible with a minimum size of 20 amps, Universal input voltage, DNP 3.0 communications, and relay alarm outputs. Using this logic, a **Lamarche A75DE-20-48V-ABD-1-24L-46R-21P** charger (or equivalent) would be required. This model would include an input voltage of 240Vac and an output of 48Vdc and 20Adc, communications capability, and alarm relays. The total continuous current used in this calculation includes adequate capacity to allow for future build out.

Mesa Associates, Inc. Engineers & Consultants 10604 Murdock Drive Knoxville, TN 37932 (865) 671-5400 ***CALCULATION SHEET***	Client/job: CORED Substation 500 Battery Study Mesa Task #: 1330500 Calculated by: Mandy Elgan Date: 6/17/2014 Checked by: Keith Hurst Date: 3/10/2015

6.0 Room Exhaust

6.1 Assumptions

6.1.1 Lead acid batteries produce 0.016 cubic feet of hydrogen per cell, per hour at standard pressure

6.1.2 Percent of overcharge assumed during recharge is 20%

6.2 Calculate Hydrogen Concentration

Hydrogen Concentration	H =	3.84
H = ((C X O X G X A) / R) / 100		
C = number of cells	24	
O = percent of overcharge assumed during recharge, use 20% (20)	20	
G = Volume of hydrogen produced by one amp of charge. Use (0.016)	0.016	
A = 8-hour rated capacity of battery in amp hours	200	
R = Assume gas is released during last (4) hours of 8 hour charge	4	

6.3 Calculate Room Volume

Room Volume	V =	1282.50
W x L x H		
W = Width	10	
L = Length	9.5	
H = Height	13.5	

6.4 Ventilation Requirement

Ventilation Requirement	=	200.39	
V = R x P / H x 60 mins			
R = Room cu. ft.	1282.5		
P = Max percentage of hydrogen gas allowed	0.01		
H = Total hydrogen produced per hour	3.84		

6.5 Fan Requirement

Fan Requirement	=	384	cu ft per hour
Fan Size = R x 60 / V			
R = Room cu. ft.	1282.5		
V = Ventilation req'd	200.390625		
	or		**6.4 CFM**
Exising Fan rated (conservative assmption)	100	**cfm**	
Set existing fan to run minutes per hour	4	**Minutes/Hour**	

C&D TECHNOLOGIES, INC.
1400 UNION MEETING ROAD
BLUE BELL, PA 19422-0858
(215) 619-2700
FAX: (215) 619-7840

Title:	CORED Battery Study
Company:	CORED
Sized By:	Clifford Hurst
Date:	Thursday, April 23, 2015
Reference No.:	Sub 600

Key Parameters:		Parallel Strings:	1
Number of Cells:	60	Minimum Temp:	60.0 F
Number of Jars:	20	Design Margin:	1.10
Cell Final Voltage:	1.75 vDC	Aging Factor:	1.25

Load Information

Profile: Step Load

	Load (amps)	Time (min)
Period 1	9.4	480
Period 2	54.24	1
Period 3	69.4	1
Period 4	49.4	3

Total Time:	8 hr. 5 min.
AH Removed	79.73
Random Load:	n/a
Duration:	n/a

Battery:

Model:	3DJ-200
Specific Gravity:	1.215
Type:	Flooded 20 year
Product Line:	DJ
Selection Criteria:	By Battery Type - Flooded 20 year
% of Requirement:	110.61 %
Number of Jars:	20
Jar Length:	8.09 in.
Jar Width:	13.58 in.
Jar Height:	15.22 in.
No. Plates:	9
Float vpc:	2.21 vDC
Max vpc:	2.33 vDC
Jar Weight:	139.00 lbs.
Battery Weight:	2,780.00 lbs.

The C&D Sizing Program adheres to the battery sizing methodologies found in the current versions of IEEE-485, Practice for Sizing Lead Acid Batteries for Stationery Applications and IEEE1184, Guide for Selection/Sizing of Batteries for Uninterruptible Power Systems

Battery Rack:

	Rack 1
Qty:	1
Model:	RDB0801-7.3EP1P
Drawing No.:	M-11417
Style:	2 Tier
Rails:	Powder Coated 'Painted' Rail
Rating:	EP1
Length:	7.30 Ft.
Width:	20.19 in.
Height:	45.88 in.

Per Rack Section

Rack Area:	12.28 sq. Ft.
Rack Weight:	260.00 lbs.

Per Battery String

Utilization:	97.77 %
Rack Area:	12.28 sq. Ft.
Rack Weight:	260.00 lbs.

FORM # BSP-A3 REV DATE 06/18/02

Thursday, April 23, 2015

© 2015 C&D Technologies, Inc.

All critical calculations must be verified with C&D applications.
Specifications are subject to change without notice.

C&D TECHNOLOGIES, INC.
1400 UNION MEETING ROAD
BLUE BELL, PA 19422-0858
(215) 619-2700
FAX: (215) 619-7840

COMPANY: CORED

REF: Sub 600

DATE: 4/23/2015
SIZED BY: Clifford Hurst
IEEE STD.: 485-2010

LOWEST DESIGN TEMPERATURE	60.0 F	MINIMUM DESIGN CELL VOLTAGE	1.75	SIZING BASIS PLATE NOMENCLATURE	DJ

Load Period	Load (amperes)	Change in Load (amperes)		Duration of Load Period (minutes)	Time to End of Section (minutes)	Capacity Amperes per Pos. Plate	Required Section Cell Size Positive Plates	
		+ Values	- Values				+ Values	- Values
SECTION 1								
1	9.40	9.40		480	480	6.20	1.517	
						SECTION 1 TOTAL:	1.517	
SECTION 2								
1	9.40	9.40		480	481	6.19	1.520	
2	54.24	44.84		1	1	71.86	0.624	
						SECTION 2 TOTAL:	2.144	
SECTION 3								
1	9.40	9.40		480	482	6.18	1.522	
2	54.24	44.84		1	2	70.47	0.636	
3	69.40	15.16		1	1	71.86	0.211	
						SECTION 3 TOTAL:	2.369	
SECTION 4								
1	9.40	9.40		480	485	6.15	1.529	
2	54.24	44.84		1	5	66.29	0.676	
3	69.40	15.16		1	4	67.68	0.224	
4	49.40		20.00	3	3	69.07		0.290
						SECTION 4 TOTAL:	2.140	

MAXIMUM SELECTED SIZE	2.37	+ RANDOM LOAD SIZE	0.00	= Base Design Size	2.37
				X Temperature Correction	1.110
		BASE DESIGN MULTIPLIERS		X Design Margin	1.10

				X Aging Factor	1.25
				= NUMBER OF POSITIVE PLATE	3.62
POSITIVE PLATES	4	Strings per System	1	Cell Model	3DJ-200
				CELLS PER JAR	3

FORM # BSP-A1 REV DATE 3/21/05

Thursday, April 23, 2015

© 2015 C&D Technologies, Inc.
All critical calculations must be verified with C&D applications.
Specifications are subject to change without notice.

Mesa Associates, Inc.
Engineers & Consultants
10604 Murdock Drive
Knoxville, TN 37932
(865) 671-5400

CALCULATION SHEET

Client/job	CORED Substation 600 Battery Study
Mesa Task #	1330500
Calculated by:	Mandy Elgan — Date: 6/17/2014
Checked by:	Keith Hurst — Date: 3/10/2015

1.0 Purpose

The purpose of the calculation is to size the substation battery and battery charger. The methodology is supported by IEEE Standard 485, "Recommended Practice for Sizing Lead Acid Batteries for Stationary Applications". The IEEE method is designed to cover continuous, non-continuous, and random loads.

2.0 Scope

This calculation documents the DC load requirements and verifies that the 125VDC battery and its charger capacity are not exceeded. This calculation will document the continuous loads, non-continuous loads, random loads, and the periods of operation. The required capacity of the charger will be determined using the IEEE-485 calculation method. The results of this calculation will identify the size and type of battery and battery charger required.

3.1 The Amp/Positive plate calculation method will be used.
3.2 A 1.10 design margin is used for unexpected load growth.
3.3 An aging factor of 1.25 will be used for battery decay to ensure a full life of the battery.
3.4 The minimum battery voltage for 125VDC system is 105 Volts.
3.5 The maximum battery voltage for 125VDC system is 140 Volts.

3.0 References

Single Line Diagram(s)
Relay Panel Front View(s)
Site Visit Notes and Photos

4.0 Design Input

Number of Cells	60
Design Margin	1.10
Aging Factor	1.25
Ambient Temp	60
Temp Factor	1.11

Electrolyte Temp. ºF	Electrolyte Temp. ºC	Cell Size Correction Factor	Electrolyte Temperature ºF	Electrolyte Temperature ºC	Cell Size Correction Factor
25	-3.9	1.52	80	26.7	0.98
30	-1.1	1.43	85	29.4	0.96
35	1.7	1.35	90	32.2	0.94
40	4.4	1.3	95	35	0.93
45	7.2	1.25	100	37.8	0.91
50	10	1.19	105	40.6	0.89
55	12.8	1.15	110	43.3	0.88
60	15.6	1.11	115	46.1	0.87
65	18.3	1.08	120	48.9	0.86
70	21.1	1.04	125	51.7	0.85
77	25	1			

Mesa Associates, Inc.
Engineers & Consultants
10604 Murdock Drive
Knoxville, TN 37932
(865) 671-5400

CALCULATION SHEET

Client/job	CORED Substation 600 Battery Study
Mesa Task #	1330500
Calculated by:	Mandy Elgan — Date: 6/17/2014
Checked by:	Keith Hurst — Date: 3/10/2015

5.0 Computation & Analysis

5.1 Existing Loads

5.1.1 Continuous Loads

5.1.1.1

Determine the amount of current constantly connected and energized, such as lights, digital relays, RTUs, power supplies, etc.

5.1.1.2 Continuous Load Data

Set 1

Device	Desc	Quantity	Amps ea.	Total Amps
(50/51) Phase Overcurrent	GEC MCGG 22	15	0.016	0.24
(87) Differential Relay	MBCH12	9	0.06	0.54
(50N) Ground Overcurrent	GEC MCGG 22	2	0.016	0.032
Time Delay (62)	AG 7012NF	1	0.064	0.064
(64N) Neutral Overcurrent	GEC MCGG 22	3	0.016	0.048
(79) Reclosing Relay	MVTR	3	0.05	0.15
Indicating Light	ET-16	17	0.02	0.34

5.1.1.3 **Total Continuous Load** **1.414 A**

5.1.1.4 Continuous loads from battery charger inspection during site visit **1 A**

5.1.1.5

For an existing Station, the measured continuous load in line 5.1.1.4 can be used for documenting changes to the calculated continuous load. Assumptions must be attached to this calculation as to how the actual measured current affects the component calculation method, and while the calculated continuous load is being adjusted. When using the value from the Battery Reports, one must ensure all equipment is operating and the charger is not in the equalizing mode.

Mesa Associates, Inc.
Engineers & Consultants
10604 Murdock Drive
Knoxville, TN 37932
(865) 671-5400

CALCULATION SHEET

Client/job	CORED Substation 600 Battery Study		
Mesa Task #	1330500		
Calculated by:	Mandy Elgan	Date:	6/17/2014
Checked by:	Keith Hurst	Date:	3/10/2015

5.1.2 Non-Continuous Loads

5.1.2.1 Determine the maximum number of breakers that are likely to trip at one time such as Breaker Failure or Bus Differential. When calculating the total trip current, remember that every breaker may have a different tripping current and/or DC charging motor. Per IEEE Std. 485, "Although momentary loads may exist for only a fraction of a second, each is considered to last for a full minute because the instantaneous battery voltage drop for a given momentary load is essentially the same as the voltage drop after one minute".

5.1.2.2 Non-Continuous Load Data

Device		Quantity	Amps ea.	Total Amps
161KV Trip Coil		2	6.8	13.6
69KV Trip Coil		6	4.2	25.2
Annunciator Relay		60	0.024	1.44
MOD TRIP		3	22	66
MOD Motor		3	40	120
BF LO Relay Electroswitch 7825DD		1	4.6	4.6

5.1.2.3 Total Non-Continuous Load **230.84**

5.1.2.4 Analyze the station and determine if any breakers use a DC closing solenoid or a DC powered switch. These devices can draw a great many amps and may exceed the value calculated in line 5.1.2.3. If more than one of these devices is present, then select the unit with the largest current requirement.

5.1.2.5 Close Breaker or Switch current draw 4.6

5.1.2.6 Total Non-continuous Load 230.84

5.1.3 Random Loads

5.1.3.1 This section calculates the loads that occur at random times, such as emergency pumps, heaters, etc

5.1.3.2 Random Load Data

Device	Desc	Quantity	Amps ea.	Total Amps
	N/A			0

5.1.3.3 Total Random Loads 0

Mesa Associates, Inc.
Engineers & Consultants
10604 Murdock Drive
Knoxville, TN 37932
(865) 671-5400

CALCULATION SHEET

Client/job	CORED Substation 600 Battery Study
Mesa Task #	1330500
Calculated by:	Mandy Elgan — Date: 6/17/2014
Checked by:	Keith Hurst — Date: 3/10/2015

5.2 Future Loads

5.2.1 Future Continuous Loads

5.2.1.1

Determine the amount of current constantly connected and energized such as lights, digital relays, RTUs, power supplies, etc.

5.2.1.2 Future Continuous Load Data

Device	Desc	Quantity	Amps ea.	Total Amps
	SCADA System	1	3	3
	FO Dead-End or Head-End Boxes	1	5	5
OR	Repeater or Small Mesh Antennae	1	3	3

5.2.1.3 Total Future Cont. Load 8

5.2.2 Non-Continuous Loads

5.2.2.1 Determine the maximum number of breakers that are likely to trip at one time such as Breaker Failure or Bus Differential. When calculating the total trip current, remember that every breaker may have a different tripping current and/or DC charging motor. Per IEEE Std. 485, "Although momentary loads may exist for only a fraction of a second, each is considered to last for a full minute because the instantaneous battery voltage drop for a given momentary load is essentially the same as the voltage drop after one minute".

5.2.2.2 Future Non-Continuous Load Data

Device	Desc	Quantity	Amps ea.	Total Amps
	N/A			

5.2.2.3 Total Future NonCont. Load 0

5.2.2.4 Analyze the future station plans and determine if any breakers use a DC closing solenoid or a DC powered switch. These devices can draw a great many amps and may exceed the value calculated in line 5.1.2.3. If more than one of these devices is present, then select the unit with the largest current requirement.

5.2.2.5 Future Close Breaker or SW Current draw 0

5.2.2.6 Future Total Non-continuous Load 0
(Larger of lines 5.2.2.3 or 5.2.2.5)

5.2.3 Random Loads

5.2.3.1 This section calculates the loads that occur at random times, such as emergency pumps, heaters, etc.

5.1.3.2 Future Random Load Data

Device	Desc	Quantity	Amps ea.	Total Amps
	N/A			0

5.2.3.3 Total Future Random Loads 0

Mesa Associates, Inc.
Engineers & Consultants
10604 Murdock Drive
Knoxville, TN 37932
(865) 671-5400

CALCULATION SHEET

Client/job	CORED Substation 600 Battery Study
Mesa Task #	1330500
Calculated by:	Mandy Elgan — Date: 6/17/2014
Checked by:	Keith Hurst — Date: 3/10/2015

5.3	Total Load Data	Set 1
5.3.1	**Total Continuous Loads**	**9.414**
5.3.2	Total Non Continuous Loads (trip)	230.84
5.3.3	Largest Close or SW current draw (Larger of 5.1.2.5 or 5.2.2.5)	4.6
5.3.4	**Total Non Continuous Loads (trip)** (Larger of 5.3.2 or 5.3.3)	**230.84**
5.3.5	**Total Random Loads**	**0**

(Calculation below was completed using C&D Battery Sizing Software)

Load Period	Load (amperes)	Change in Load (amperes) + Values	Change in Load (amperes) - Values	Duration of Load Period (minutes)	Time To End of Section (minutes)	Capacity Amperes per Pos Plates	Required Section Cell Size Positive Plates + Values	Required Section Cell Size Positive Plates - Values
SECTION 1								
1	9.400	9.400		480	480	6.2	1.517	
						SECTION 1 TOTAL :	**1.517**	
SECTION 2								
1	9.400	9.400		480	481	6.19	1.520	
2	52.240	42.840		1	1	71.86	0.624	
						SECTION 2 TOTAL :	**2.144**	
SECTION 2								
1	9.400	9.400		480	482	6.18	1.522	
2	52.240	42.840		1	1	70.47	0.636	
2	69.400	17.160		1	1	71.86	0.211	
						SECTION 2 TOTAL :	**2.369**	
SECTION 2								
1	9.400	9.400		480	485	6.15	1.529	
2	52.240	42.840		1	1	66.29	0.676	
2	69.400	17.160		1	1	67.68	0.224	
2	49.400	-20.000		3	3	69.07	-0.290	
						SECTION 2 TOTAL :	**2.139**	
RANDOM EQUIPMENT LOADS								
	0							

number obtained via C&D data

Maximum Size: 2.37 **+ Random Load Size:** 0.00 **= Base Design Size:** 2.37

X Temperature Correction: 0
X Design Margin: 1.10
X Aging Factor: 1.11
= Number of Positive Plates: 3.62

Cell Model: C&D 3DJ-200 or Equivalent **Nominal AH Rating: 200** **8 Hr Rating: 25**

Positive Plates: 4 **Strings Per System: 1** **Cell per Jar: 3**

Mesa Associates, Inc.
Engineers & Consultants
10604 Murdock Drive
Knoxville, TN 37932
(865) 671-5400

CALCULATION SHEET

Client/job	CORED Substation 600 Battery Study		
Mesa Task #	1330500		
Calculated by:	Mandy Elgan	Date:	6/17/2014
Checked by:	Keith Hurst	Date:	3/10/2015

5.4 Methodology & Recommendation

5.5.1 Methodology

The above calculation is based on a duty cycle of four distinct periods. The first period is the constant draw of the continuous current while the station is without an AC feed. We have assumed worst case. We have used an eight (8) hour period of time for this section as this has typically been used in the industry. Also, this period has the most affect on this type of battery and produces the most losses.

The next period includes all the continuous currents plus the current need to trip six breakers, one lockout relay, and Annunciator. This would be the scenario for a future design with a bus diff, which has a higher non-continuous load than the current design breaker failure, and all would occur within a minute of duration. The next period would include opening all the MODs and the final period would be

5.4.2 Recommendation

Mesa Associates recommends one sets of C&D 3DJ-200 or equivalent batteries. This battery will supply all needs for the existing configuration and be adequate for future build out of the communications system.

5.5 Battery Fault Current

Per IEEE, the maximum fault current a battery can produce is generally eight to ten times the one minute rating of the battery system. In the absence of exact data from the manufacturer, we will assume worst case and use ten times one minute rating. This should be used to size protective devices.

One minute rating of the battery system	287.4	(from C&D literature)
5.5.1 Maximum DC Fault Current Available	2874	

5.6 Charger Selection

5.6.1 Charger output=continuous load + ((1.1*8hr rating of battery)/hours to recharge) per IEEE

5.6.2	Total Continuous Loads	9.414
5.6.3	8 Hour Rating of Battery	25
5.6.4	Hours to Recharge	8
5.6.5	Required Charger Output	12.85

5.6.6 Battery Charger Recommendation

IEEE recommends time for recharge between 8 and 12 hours. Mesa also recommends standardizing sizes where possible with a minimum size of 20 amps, Universal input voltage, DNP 3.0 communications, and relay alarm outputs. Using this logic, a **Lamarche A75DE-20-125V-ABD-1-60L-46R-21P** charger (or equivalent) would be required. This model would include an input voltage of 240Vac and an output of 125Vdc and 20Adc, communications capability, and alarm relays. The total continuous current used in this calculation includes adequate capacity to allow for future build out.

Mesa Associates, Inc. Engineers & Consultants 10604 Murdock Drive Knoxville, TN 37932 (865) 671-5400 ***CALCULATION SHEET***	Client/job: CORED Substation 600 Battery Study Mesa Task #: 1330500 Calculated by: Mandy Elgan Date: 6/17/2014 Checked by: Keith Hurst Date: 3/10/2015

6.0 Room Exhaust

6.1 Assumptions

6.1.1 Lead acid batteries produce 0.016 cubic feet of hydrogen per cell, per hour at standard pressure

6.1.2 Percent of overcharge assumed during recharge is 20%

6.2 Calculate Hydrogen Concentration

Hydrogen Concentration	H =	9.6
H = ((C X O X G X A) / R) / 100		
C = number of cells		60
O = percent of overcharge assumed during recharge, use 20% (20)		20
G = Volume of hydrogen produced by one amp of charge. Use (0.016)		0.016
A = 8-hour rated capacity of battery in amp hours		200
R = Assume gas is released during last (4) hours of 8 hour charge		4

6.3 Calculate Room Volume

Room Volume	V =	800
W x L x H		
W = Width		10
L = Length		8
H = Height		10

6.4 Ventilation Requirement

Ventilation Requirement	=	50.00	
V = R x P / H x 60 mins			
R = Room cu. ft.		800	
P = Max percentage of hydrogen gas allowed		0.01	
H = Total hydrogen produced per hour		9.6	

6.5 Fan Requirement

Fan Requirement	=	960	cu ft per hour	
Fan Size = R x 60 / V				
R = Room cu. ft.		800		
V = Ventilation req'd		50		
	or		**16 CFM**	
Exising Fan rated (conservative assmption)		100	**cfm**	**200**
Set existing fan to run minutes per hour		10	**Minutes/Hour**	**5**

C&D TECHNOLOGIES, INC.
1400 UNION MEETING ROAD
BLUE BELL, PA 19422-0858
(215) 619-2700
FAX: (215) 619-7840

Title:	CORED Battery Study
Company:	CORED
Sized By:	Clifford Hurst
Date:	Thursday, April 16, 2015
Reference No.:	Sub 700

Key Parameters:		Parallel Strings:	1
Number of Cells:	24	Minimum Temp:	60.0 F
Number of Jars:	8	Design Margin:	1.10
Cell Final Voltage:	1.75 vDC	Aging Factor:	1.25

Load Information

Profile: Step Load

	Load (amps)	Time (min)
Period 1	9	480
Period 2	61.45	1
Period 3	69	1
Period 4	49	3

Total Time:	8 hr. 5 min.
AH Removed	76.62
Random Load:	n/a
Duration:	n/a

Battery:

Model:	3DJ-200
Specific Gravity:	1.215
Type:	Flooded 20 year
Product Line:	DJ
Selection Criteria:	By Battery Type - Flooded 20 year
% of Requirement:	113.62 %
Number of Jars:	8
Jar Length:	8.09 in.
Jar Width:	13.58 in.
Jar Height:	15.22 in.
No. Plates:	9
Float vpc:	2.21 vDC
Max vpc:	2.33 vDC
Jar Weight:	139.00 lbs.
Battery Weight:	1,112.00 lbs.

The C&D Sizing Program adheres to the battery sizing methodologies found in the current versions of IEEE-485, Practice for Sizing Lead Acid Batteries for Stationery Applications and IEEE1184, Guide for Selection/Sizing of Batteries for Uninterruptible Power Systems

Battery Rack:

	Rack 1
Qty:	1
Model:	RDB0800-06EP1P
Drawing No.:	M-11414
Style:	1 Tier
Rails:	Powder Coated 'Painted' Rail
Rating:	EP1
Length:	6.00 Ft.
Width:	18.19 in.
Height:	16.69 in.

Per Rack Section

Rack Area:	9.10 sq. Ft.
Rack Weight:	97.00 lbs.

Per Battery String

Utilization:	95.44 %
Rack Area:	9.10 sq. Ft.
Rack Weight:	97.00 lbs.

FORM # BSP-A3 REV DATE 06/18/02

Thursday, April 16, 2015

© 2015 C&D Technologies, Inc.

All critical calculations must be verified with C&D applications.
Specifications are subject to change without notice.

C&D TECHNOLOGIES, INC.
1400 UNION MEETING ROAD
BLUE BELL, PA 19422-0858
(215) 619-2700
FAX: (215) 619-7840

COMPANY: CORED

REF: Sub 700

DATE: 4/16/2015
SIZED BY: Clifford Hurst
IEEE STD.: 485-2010

LOWEST DESIGN TEMPERATURE	60.0 F	MINIMUM DESIGN CELL VOLTAGE	1.75	SIZING BASIS PLATE NOMENCLATURE	DJ

Load Period	Load (amperes)	Change in Load (amperes)		Duration of Load Period (minutes)	Time to End of Section (minutes)	Capacity Amperes per Pos. Plate	Required Section Cell Size Positive Plates	
		+ Values	- Values				+ Values	- Values
SECTION 1								
1	9.00	9.00		480	480	6.20	1.453	
						SECTION 1 TOTAL:	1.453	
SECTION 2								
1	9.00	9.00		480	481	6.19	1.455	
2	61.45	52.45		1	1	71.86	0.730	
						SECTION 2 TOTAL:	2.185	
SECTION 3								
1	9.00	9.00		480	482	6.18	1.457	
2	61.45	52.45		1	2	70.47	0.744	
3	69.00	7.55		1	1	71.86	0.105	
						SECTION 3 TOTAL:	2.307	
SECTION 4								
1	9.00	9.00		480	485	6.15	1.464	
2	61.45	52.45		1	5	66.29	0.791	
3	69.00	7.55		1	4	67.68	0.112	
4	49.00		20.00	3	3	69.07		0.290
						SECTION 4 TOTAL:	2.077	

MAXIMUM SELECTED SIZE	2.31	+ RANDOM LOAD SIZE	0.00	= Base Design Size	2.31
				X Temperature Correction	1.110
		BASE DESIGN MULTIPLIERS		X Design Margin	1.10

				X Aging Factor	1.25
				= NUMBER OF POSITIVE PLATE	3.52
POSITIVE PLATES	4	Strings per System	1	Cell Model	3DJ-200
				CELLS PER JAR	3

FORM # BSP-A1 REV DATE 3/21/05

Thursday, April 16, 2015

© 2015 C&D Technologies, Inc.
All critical calculations must be verified with C&D applications.
Specifications are subject to change without notice.

Mesa Associates, Inc.
Engineers & Consultants
10604 Murdock Drive
Knoxville, TN 37932
(865) 671-5400
Fax (865) 671-5403

CALCULATION SHEET

Client/job	CORED Substation 700 Battery Study
Mesa Task #	1330500
Calculated by:	Mandy Elgan
Date:	6/17/2014
Checked by:	Keith Hurst
Date:	3/10/2015

1.0 Purpose

The purpose of the calculation is to size the substation battery and battery charger. The methodology is supported by IEEE Standard 485, "Recommended Practice for Sizing Lead Acid Batteries for Stationary Applications". The IEEE method is designed to cover continuous, non-continuous, and random loads.

2.0 Scope

This calculation documents the DC load requirements and verifies that the 48VDC battery and its charger capacity are not exceeded. This calculation will document the continuous loads, non-continuous loads, random loads, and the periods of operation. The required capacity of the charger will be determined using the IEEE-485 calculation method. The results of this calculation will identify the size and type of battery and battery charger required.

3.1 The Amp/Positive plate calculation method will be used.
3.2 A 1.10 design margin is used for unexpected load growth.
3.3 An aging factor of 1.25 will be used for battery decay to ensure a full life of the battery.
3.4 The minimum battery voltage for 48VDC system is 42 Volts.
3.5 The maximum battery voltage for 48VDC system is 54 Volts.

3.0 References

Single Line Diagram(s)
Relay Panel Front View(s)
Site Visit Notes and Photos

4.0 Design Input

Number of Cells	24
Design Margin	1.10
Aging Factor	1.25
Ambient Temp	60
Temp Factor	1.11

Electrolyte Temp. ºF	Electrolyte Temp. ºC	Cell Size Correction Factor	Electrolyte Temperature ºF	Electrolyte Temperature ºC	Cell Size Correction Factor
25	-3.9	1.52	80	26.7	0.98
30	-1.1	1.43	85	29.4	0.96
35	1.7	1.35	90	32.2	0.94
40	4.4	1.3	95	35	0.93
45	7.2	1.25	100	37.8	0.91
50	10	1.19	105	40.6	0.89
55	12.8	1.15	110	43.3	0.88
60	15.6	1.11	115	46.1	0.87
65	18.3	1.08	120	48.9	0.86
70	21.1	1.04	125	51.7	0.85
77	25	1			

Mesa Associates, Inc.
Engineers & Consultants
10604 Murdock Drive
Knoxville, TN 37932
(865) 671-5400
Fax (865) 671-5403

CALCULATION SHEET

Client/job	CORED Substation 700 Battery Study
Mesa Task #	1330500
Calculated by:	Mandy Elgan — Date: 6/17/2014
Checked by:	Keith Hurst — Date: 3/10/2015

5.0 Computation & Analysis

5.1 Existing Loads

5.1.1 Continuous Loads

5.1.1.1 Determine the amount of current constantly connected and energized, such as lights, digital relays, RTUs, power supplies, etc.

5.1.1.2 Continuous Load Data

Set 1

Device	Desc.	Quantity	Amps ea.	Total Amps
(50/51) Phase Overcurrent	ABB Type MMCO	2	0.0416	0.0832
(51G) Overcurrent Relay	ABB Type MCO	1	0.06	0.06
(87) Differential Relay	ABB Type HU	2	0.0416	0.0832
(94) Auxiliary Relay	ABB Type TR-1	1	0.166	0.166
Indicating lights	Type ET-16	4	0.02	0.08

5.1.1.3 **Total Continuous Load** **0.472 A**

5.1.1.4 Continuous loads from battery charger inspection during site visit **1.25 A**

5.1.1.5 For an existing Station, the measured continuous load in line 5.1.1.4 can be used for documenting changes to the calculated continuous load. Assumptions must be attached to this calculation as to how the actual measured current affects the component calculation method, and while the calculated continuous load is being adjusted. When using the value from the Battery Reports, one must ensure all equipment is operating and the charger is not in the equalizing mode.

Mesa Associates, Inc.
Engineers & Consultants
10604 Murdock Drive
Knoxville, TN 37932
(865) 671-5400
Fax (865) 671-5403

CALCULATION SHEET

Client/job: CORED Substation 700 Battery Study

Mesa Task #: 1330500

Calculated by: Mandy Elgan Date: 6/17/2014

Checked by: Keith Hurst Date: 3/10/2015

5.1.2 Non-Continuous Loads

5.1.2.1 Determine the maximum number of breakers that are likely to trip at one time such as Breaker Failure or Bus Differential. When calculating the total trip current, remember that every breaker may have a different tripping current and/or DC charging motor. Per IEEE Std. 485, "Although momentary loads may exist for only a fraction of a second, each is considered to last for a full minute because the instantaneous battery voltage drop for a given momentary load is essentially the same as the voltage drop after one minute".

5.1.2.2 Non-Continuous Load Data

Device	Desc.	Quantity	Amps ea.	Total Amps
Lockout Relay	Electroswitch Series 24	1	3.7	3.7
MOD	Trip	0	22	0
MOD	Motor Open	0	40	0
Circuit Swither	Open	0	40	0
13kv Breaker	Trip Coil #1	2	16.35	32.7
Breaker 714 trip	Trip Coil #1	1	16	16

5.1.2.3 Total Non-Continuous Load **52.4**

5.1.2.4 Analyze the station and determine if any breakers use a DC closing solenoid or a DC powered switch. These devices can draw a great many amps and may exceed the value calculated in line 5.1.2.3. If more than one of these devices is present, then select the unit with the largest current requirement.

5.1.2.5 Close Breaker or Switch current draw 4.6

5.1.2.6 Total Non-continuous Load 52.4

5.1.3 Random Loads

5.1.3.1 This section calculates the loads that occur at random times, such as emergency pumps, heaters, etc

5.1.3.2 Random Load Data

Device	Desc	Quantity	Amps ea.	Total Amps
N/A				0

5.1.3.3 Total Random Loads 0

Mesa Associates, Inc.
Engineers & Consultants
10604 Murdock Drive
Knoxville, TN 37932
(865) 671-5400
Fax (865) 671-5403

CALCULATION SHEET

Client/job: CORED Substation 700 Battery Study

Mesa Task #: 1330500

Calculated by: Mandy Elgan Date: 6/17/2014

Checked by: Keith Hurst Date: 3/10/2015

5.2 Future Loads

5.2.1 Future Continuous Loads

5.2.1.1 Determine the amount of current constantly connected and energized such as lights, digital relays, RTUs, power supplies, etc.

5.2.1.2 Future Continuous Load Data

Device	Desc	Quantity	Amps ea.	Total Amps
	SCADA System	1	3	3
	FO Dead-End or Head-End Boxes	1	5	5
OR	Repeater or Small Mesh Antennae	1	3	3

5.2.1.3 Total Future Cont. Load 8

5.2.2 Non-Continuous Loads

5.2.2.1 Determine the maximum number of breakers that are likely to trip at one time such as Breaker Failure or Bus Differential. When calculating the total trip current, remember that every breaker may have a different tripping current and/or DC charging motor. Per IEEE Std. 485, "Although momentary loads may exist for only a fraction of a second, each is considered to last for a full minute because the instantaneous battery voltage drop for a given momentary load is essentially the same as the voltage drop after one minute".

5.2.2.2 Future Non-Continuous Load Data

Device	Desc	Quantity	Amps ea.	Total Amps
N/A				

5.2.2.3 Total Future NonCont. Load 0

5.2.2.4 Analyze the future station plans and determine if any breakers use a DC closing solenoid or a DC powered switch. These devices can draw a great many amps and may exceed the value calculated in line 5.1.2.3. If more than one of these devices is present, then select the unit with the largest current requirement.

5.2.2.5 Future Close Breaker or SW Current draw 0

5.2.2.6 Future Total Non-continuous Load 0
(Larger of lines 5.2.2.3 or 5.2.2.5)

5.2.3 Random Loads

5.2.3.1

This section calculates the loads that occur at random times, such as emergency pumps, heaters, etc

5.1.3.2 Future Random Load Data

Device	Desc	Quantity	Amps ea.	Total Amps
N/A				0

5.2.3.3 Total Future Random Loads 0

Mesa Associates, Inc.
Engineers & Consultants
10604 Murdock Drive
Knoxville, TN 37932
(865) 671-5400
Fax (865) 671-5403

CALCULATION SHEET

Client/job: CORED Substation 700 Battery Study

Mesa Task #: 1330500

Calculated by: Mandy Elgan Date: 6/17/2014

Checked by: Keith Hurst Date: 3/10/2015

5.3	Total Load Data	Set 1
5.3.1	**Total Continuous Loads**	**9.250**
5.3.2	Total Non Continuous Loads (trip)	52.4
5.3.3	Largest Close or SW current draw (Larger of 5.1.2.5 or 5.2.2.5)	4.6
5.3.4	**Total Non Continuous Loads (trip)** (Larger of 5.3.2 or 5.3.3)	**52.4**
5.3.5	**Total Random Loads**	**0**

(Calculation below was completed using C&D Battery Sizing Software)

Load Period	Load (amperes)	Change in Load (amperes) + Values	Change in Load (amperes) - Values	Duration of Load Period (minutes)	Time To End of Section (minutes)	Capacity Amperes per Pos Plates	Required Section Cell Size Positive Plates + Values	Required Section Cell Size Positive Plates - Values
SECTION 1								
1	9.000	9.000		480	480	6.2	1.453	
						SECTION 1 TOTAL :	**1.453**	
SECTION 2								
1	9.000	9.000		480	481	6.19	1.455	
2	61.450	52.450		1	1	71.86	0.730	
						SECTION 2 TOTAL :	**2.185**	
SECTION 2								
1	9.000	9.000		480	482	6.18	1.457	
2	61.450	52.450		1	1	70.47	0.744	
2	69.000	7.550		1	1	71.86	0.105	
						SECTION 2 TOTAL :	**2.306**	
SECTION 2								
1	9.000	9.000		480	485	6.15	1.464	
2	61.450	52.450		1	1	66.29	0.791	
2	69.000	7.550		1	1	67.68	0.112	
2	49.000	-20.000		3	3	69.07	-0.290	
						SECTION 2 TOTAL :	**2.077**	
RANDOM EQUIPMENT LOADS								
	0							

number obtained via C&D data

Maximum Size: 2.31 **+ Random Load Size:** 0.00 **= Base Design Size:** 2.31

X Temperature Correction: 1.11
X Design Margin: 1.10
X Aging Factor: 1.25
= Number of Positive Plates: 3.52

Cell Model: C&D 3DJ-200 or Equivalent **Nominal AH Rating: 200** **8 Hr Rating: 25**

Positive Plates: 4 **Strings Per System: 1** **Cell per Jar: 3**

Mesa Associates, Inc.
Engineers & Consultants
10604 Murdock Drive
Knoxville, TN 37932
(865) 671-5400
Fax (865) 671-5403

CALCULATION SHEET

Client/job	CORED Substation 700 Battery Study		
Mesa Task #	1330500		
Calculated by:	Mandy Elgan	Date:	6/17/2014
Checked by:	Keith Hurst	Date:	3/10/2015

5.4 Methodology & Recommendation

5.5.1 Methodology

The above calculation is based on a duty cycle of four distinct periods. The first period is the constant draw of the continuous current while the station is without an AC feed. We have assumed worst case. We have used an eight (8) hour period of time for this section as this has typically been used in the industry. Also, this period has the most affect on this type of battery and produces the most losses

The next period includes all the continuous currents plus the current need to trip three breakers, and one lockout relay. This would be the scenario for a future design with a bus diff, which has a higher non-continuous load than the current design breaker failure, and all would occur within a minute of duration. The following period includes the trips of all the MOD and the final period includes

5.4.2 Recommendation

Mesa Associates recommends one sets of C&D 3DJ-200 or equivalent batteries. This battery will supply all needs for the existing configuration and be adequate for future build out of the communications system.

5.5 Battery Fault Current

Per IEEE, the maximum fault current a battery can produce is generally eight to ten times the one minute rating of the battery system. In the absence of exact data from the manufacturer, we will assume worst case and use ten times one minute rating. This should be used to size protective devices.

One minute rating of the battery system	287.4	(from C&D literature)
5.5.1 Maximum DC Fault Current Available	2874	

5.6 Charger Selection

5.6.1 Charger output=continuous load + ((1.1*8hr rating of battery)/hours to recharge) per IEEE

5.6.2	Total Continuous Loads	9.000
5.6.3	8 Hour Rating of Battery	25
5.6.4	Hours to Recharge	8
5.6.5	Required Charger Output	12.44

5.6.6 Battery Charger Recommendation

IEEE recommends time for recharge between 8 and 12 hours. Mesa also recommends standardizing sizes where possible with a minimum size of 20 amps, Universal input voltage, DNP 3.0 communications, and relay alarm outputs. Using this logic, a **Lamarche A75DE-20-48V-ABD-1-24L-46R-21P** charger (or equivalent) would be required. This model would include an input voltage of 240Vac and an output of 48Vdc and 20Adc, communications capability, and alarm relays. The total continuous current used in this calculation includes adequate capacity to allow for future build out.

Mesa Associates, Inc.
Engineers & Consultants
10604 Murdock Drive
Knoxville, TN 37932
(865) 671-5400
Fax (865) 671-5403

CALCULATION SHEET

Client/job	CORED Substation 700 Battery Study		
Mesa Task #	1330500		
Calculated by:	Mandy Elgan	Date:	6/17/2014
Checked by:	Keith Hurst	Date:	3/10/2015

6.0 Room Exhaust

6.1 Assumptions

6.1.1 Lead acid batteries produce 0.016 cubic feet of hydrogen per cell, per hour at standard pressure

6.1.2 Percent of overcharge assumed during recharge is 20%

6.2 Calculate Hydrogen Concentration

Hydrogen Concentration	H =	3.84
H = ((C X O X G X A) / R) / 100		
C = number of cells		24
O = percent of overcharge assumed during recharge, use 20% (20)		20
G = Volume of hydrogen produced by one amp of charge. Use (0.016)		0.016
A = 8-hour rated capacity of battery in amp hours		200
R = Assume gas is released during last (4) hours of 8 hour charge		4

6.3 Calculate Room Volume

Room Volume	V =	1552.50
W x L x H		
W = Width		13.5
L = Length		11.5
H = Height		10

6.4 Ventilation Requirement

Ventilation Requirement	=	485.16	
V = R x P / H x 60 mins			
R = Room cu. ft.		1552.50	
P = Max percentage of hydrogen gas allowed		0.02	
H = Total hydrogen produced per hour		3.84	

6.5 Fan Requirement

Fan Requirement	=	192	cu ft per hour
Fan Size = R x 60 / V			
R = Room cu. ft.		1552.50	
V = Ventilation req'd		485.16	
	or		**3.2 CFM**
Exising Fan rated (conservative assmption)		100	**cfm**
Set existing fan to run minutes per hour		2	**Minutes/Hour**

C&D TECHNOLOGIES, INC.
1400 UNION MEETING ROAD
BLUE BELL, PA 19422-0858
(215) 619-2700
FAX: (215) 619-7840

Title:	CORED Battery Study
Company:	CORED
Sized By:	Clifford Hurst
Date:	Thursday, April 16, 2015
Reference No.:	Sub 800

Key Parameters:		Parallel Strings:	1
Number of Cells:	60	Minimum Temp:	60.0 F
Number of Jars:	20	Design Margin:	1.10
Cell Final Voltage:	1.75 vDC	Aging Factor:	1.25

Load Information

Profile: Step Load

	Load (amps)	Time (min)
Period 1	10	480
Period 2	44.35	1
Period 3	70	1
Period 4	50	3

Total Time:	8 hr. 5 min.
AH Removed	84.41
Random Load:	n/a
Duration:	n/a

Battery:

Model:	3DJ-200
Specific Gravity:	1.215
Type:	Flooded 20 year
Product Line:	DJ
Selection Criteria:	By Battery Type - Flooded 20 year
% of Requirement:	106.38 %
Number of Jars:	20
Jar Length:	8.09 in.
Jar Width:	13.58 in.
Jar Height:	15.22 in.
No. Plates:	9
Float vpc:	2.21 vDC
Max vpc:	2.33 vDC
Jar Weight:	139.00 lbs.
Battery Weight:	2,780.00 lbs.

The C&D Sizing Program adheres to the battery sizing methodologies found in the current versions of IEEE-485, Practice for Sizing Lead Acid Batteries for Stationery Applications and IEEE1184, Guide for Selection/Sizing of Batteries for Uninterruptible Power Systems

Battery Rack:

	Rack 1
Qty:	1
Model:	RDB0800-15EP1P
Drawing No.:	M-11414
Style:	1 Tier
Rails:	Powder Coated 'Painted' Rail
Rating:	EP1
Length:	15.00 Ft.
Width:	18.19 in.
Height:	16.69 in.

Per Rack Section

Rack Area:	22.74 sq. Ft.
Rack Weight:	210.00 lbs.

Per Battery String

Utilization:	95.44 %
Rack Area:	22.74 sq. Ft.
Rack Weight:	210.00 lbs.

FORM # BSP-A3 REV DATE 06/18/02

Thursday, April 16, 2015

© 2015 C&D Technologies, Inc.

All critical calculations must be verified with C&D applications.
Specifications are subject to change without notice.

C&D TECHNOLOGIES, INC.
1400 UNION MEETING ROAD
BLUE BELL, PA 19422-0858
(215) 619-2700
FAX: (215) 619-7840

COMPANY: CORED
REF: Sub 800

DATE: 4/16/2015
SIZED BY: Clifford Hurst
IEEE STD.: 485-2010

LOWEST DESIGN TEMPERATURE	60.0 F	MINIMUM DESIGN CELL VOLTAGE	1.75	SIZING BASIS PLATE NOMENCLATURE	DJ

Load Period	Load (amperes)	Change in Load (amperes)		Duration of Load Period (minutes)	Time to End of Section (minutes)	Capacity Amperes per Pos. Plate	Required Section Cell Size Positive Plates	
		+ Values	- Values				+ Values	- Values
SECTION 1								
1	10.00	10.00		480	480	6.20	1.614	
						SECTION 1 TOTAL:	1.614	
SECTION 2								
1	10.00	10.00		480	481	6.19	1.617	
2	44.35	34.35		1	1	71.86	0.478	
						SECTION 2 TOTAL:	2.095	
SECTION 3								
1	10.00	10.00		480	482	6.18	1.619	
2	44.35	34.35		1	2	70.47	0.487	
3	70.00	25.65		1	1	71.86	0.357	
						SECTION 3 TOTAL:	2.464	
SECTION 4								
1	10.00	10.00		480	485	6.15	1.627	
2	44.35	34.35		1	5	66.29	0.518	
3	70.00	25.65		1	4	67.68	0.379	
4	50.00		20.00	3	3	69.07		0.290
						SECTION 4 TOTAL:	2.235	

MAXIMUM SELECTED SIZE	2.46	+ RANDOM LOAD SIZE	0.00	= Base Design Size	2.46
				X Temperature Correction	1.110
		BASE DESIGN MULTIPLIERS		X Design Margin	1.10

				X Aging Factor	1.25
				= NUMBER OF POSITIVE PLATE	3.76
POSITIVE PLATES	4	Strings per System	1	Cell Model	3DJ-200
				CELLS PER JAR	3

FORM # BSP-A1 REV DATE 3/21/05

Thursday, April 16, 2015

© 2015 C&D Technologies, Inc.
All critical calculations must be verified with C&D applications.
Specifications are subject to change without notice.

Mesa Associates, Inc.
Engineers & Consultants
10604 Murdock Drive
Knoxville, TN 37932
(865) 671-5400

CALCULATION SHEET

Client/job	CORED Substation 800 Battery Study
Mesa Task #	1330500
Calculated by:	Mandy Elgan — Date: 6/17/2014
Checked by:	Keith Hurst — Date: 3/10/2015

1.0 Purpose

The purpose of the calculation is to size the substation battery and battery charger. The methodology is supported by IEEE Standard 485, "Recommended Practice for Sizing Lead Acid Batteries for Stationary Applications". The IEEE method is designed to cover continuous, non-continuous, and random loads.

2.0 Scope

This calculation documents the DC load requirements and verifies that the 125VDC battery and its charger capacity are not exceeded. This calculation will document the continuous loads, non-continuous loads, random loads, and the periods of operation. The required capacity of the charger will be determined using the IEEE-485 calculation method. The results of this calculation will identify the size and type of battery and battery charger required.

3.1 The Amp/Positive plate calculation method will be used.
3.2 A 1.10 design margin is used for unexpected load growth.
3.3 An aging factor of 1.25 will be used for battery decay to ensure a full life of the battery.
3.4 The minimum battery voltage for 125VDC system is 105 Volts.
3.5 The maximum battery voltage for 125VDC system is 140 Volts.

3.0 References

Single Line Diagram(s)
Relay Panel Front View(s)
Site Visit Notes and Photos

4.0 Design Input

Number of Cells	60
Design Margin	1.10
Aging Factor	1.25
Ambient Temp	60
Temp Factor	1.11

Electrolyte Temp. ºF	Electrolyte Temp. ºC	Cell Size Correction Factor	Electrolyte Temperature ºF	Electrolyte Temperature ºC	Cell Size Correction Factor
25	-3.9	1.52	80	26.7	0.98
30	-1.1	1.43	85	29.4	0.96
35	1.7	1.35	90	32.2	0.94
40	4.4	1.3	95	35	0.93
45	7.2	1.25	100	37.8	0.91
50	10	1.19	105	40.6	0.89
55	12.8	1.15	110	43.3	0.88
60	15.6	1.11	115	46.1	0.87
65	18.3	1.08	120	48.9	0.86
70	21.1	1.04	125	51.7	0.85
77	25	1			

Mesa Associates, Inc.
Engineers & Consultants
10604 Murdock Drive
Knoxville, TN 37932
(865) 671-5400

CALCULATION SHEET

Client/job	CORED Substation 800 Battery Study
Mesa Task #	1330500
Calculated by:	Mandy Elgan — Date: 6/17/2014
Checked by:	Keith Hurst — Date: 3/10/2015

5.0 Computation & Analysis

5.1 Existing Loads

5.1.1 Continuous Loads

5.1.1.1

Determine the amount of current constantly connected and energized, such as lights, digital relays, RTUs, power supplies, etc.

5.1.1.2 Continuous Load Data

Set 1

Device	Desc	Quantity	Amps ea.	Total Amps
(50/51) Phase Overcurrent	GEC MCGG 22	12	0.016	0.192
(87) Differential Relay	SEL-587	1	0.28	0.28
(64N) Neutral Overcurrent	GEC MCGG 22	4	0.016	0.064
Time Delay (62)	AG 7012NF	2	0.064	0.128
(79) Reclosing Relay	MVTR	2	0.05	0.1
Indicating Light	ET-16	13	0.02	0.26

5.1.1.3 **Total Continuous Load** **1.024 A**

5.1.1.4 Continuous loads from battery charger inspection during site visit **2 A**

5.1.1.5

For an existing Station, the measured continuous load in line 5.1.1.4 can be used for documenting changes to the calculated continuous load. Assumptions must be attached to this calculation as to how the actual measured current affects the component calculation method, and while the calculated continuous load is being adjusted. When using the value from the Battery Reports, one must ensure all equipment is operating and the charger is not in the equalizing mode.

Mesa Associates, Inc.
Engineers & Consultants
10604 Murdock Drive
Knoxville, TN 37932
(865) 671-5400

CALCULATION SHEET

Client/job	CORED Substation 800 Battery Study		
Mesa Task #	1330500		
Calculated by:	Mandy Elgan	Date:	6/17/2014
Checked by:	Keith Hurst	Date:	3/10/2015

5.1.2 Non-Continuous Loads

5.1.2.1 Determine the maximum number of breakers that are likely to trip at one time such as Breaker Failure or Bus Differential. When calculating the total trip current, remember that every breaker may have a different tripping current and/or DC charging motor. Per IEEE Std. 485, "Although momentary loads may exist for only a fraction of a second, each is considered to last for a full minute because the instantaneous battery voltage drop for a given momentary load is essentially the same as the voltage drop after one minute".

5.1.2.2 Non-Continuous Load Data

Device		Quantity	Amps ea.	Total Amps
161KV Trip Coil		1	6.8	6.8
69KV Trip Coil		3	4.2	12.6
MOD Trip		3	22	66
MOD Motor		3	40	120
Annunciator Relay		48	0.024	1.152
BF LO Relay Electroswitch 7825DD		3	4.6	13.8

5.1.2.3 Total Non-Continuous Load **220.352**

5.1.2.4 Analyze the station and determine if any breakers use a DC closing solenoid or a DC powered switch. These devices can draw a great many amps and may exceed the value calculated in line 5.1.2.3. If more than one of these devices is present, then select the unit with the largest current requirement.

5.1.2.5 Close Breaker or Switch current draw 4.6

5.1.2.6 Total Non-continuous Load 220.352

5.1.3 Random Loads

5.1.3.1 This section calculates the loads that occur at random times, such as emergency pumps, heaters, etc

5.1.3.2 Random Load Data

Device	Desc	Quantity	Amps ea.	Total Amps
	N/A			0

5.1.3.3 Total Random Loads 0

Mesa Associates, Inc.
Engineers & Consultants
10604 Murdock Drive
Knoxville, TN 37932
(865) 671-5400

CALCULATION SHEET

Client/job	CORED Substation 800 Battery Study
Mesa Task #	1330500
Calculated by:	Mandy Elgan — Date: 6/17/2014
Checked by:	Keith Hurst — Date: 3/10/2015

5.2 Future Loads

5.2.1 Future Continuous Loads

5.2.1.1

Determine the amount of current constantly connected and energized such as lights, digital relays, RTUs, power supplies, etc.

5.2.1.2 Future Continuous Load Data

Device	Desc	Quantity	Amps ea.	Total Amps
	SCADA System	1	3	3
	FO Dead-End or Head-End Boxes	1	5	5
OR	Repeater or Small Mesh Antennae	1	3	3

5.2.1.3 Total Future Cont. Load 8

5.2.2 Non-Continuous Loads

5.2.2.1 Determine the maximum number of breakers that are likely to trip at one time such as Breaker Failure or Bus Differential. When calculating the total trip current, remember that every breaker may have a different tripping current and/or DC charging motor. Per IEEE Std. 485, "Although momentary loads may exist for only a fraction of a second, each is considered to last for a full minute because the instantaneous battery voltage drop for a given momentary load is essentially the same as the voltage drop after one minute".

5.2.2.2 Future Non-Continuous Load Data

Device	Desc	Quantity	Amps ea.	Total Amps
	N/A			

5.2.2.3 Total Future NonCont. Load 0

5.2.2.4 Analyze the future station plans and determine if any breakers use a DC closing solenoid or a DC powered switch. These devices can draw a great many amps and may exceed the value calculated in line 5.1.2.3. If more than one of these devices is present, then select the unit with the largest current requirement.

5.2.2.5 Future Close Breaker or SW Current draw 0

5.2.2.6 Future Total Non-continuous Load 0
(Larger of lines 5.2.2.3 or 5.2.2.5)

5.2.3 Random Loads

5.2.3.1 This section calculates the loads that occur at random times, such as emergency pumps, heaters, etc.

5.1.3.2 Future Random Load Data

Device	Desc	Quantity	Amps ea.	Total Amps
	N/A			0

5.2.3.3 Total Future Random Loads 0

Mesa Associates, Inc.
Engineers & Consultants
10604 Murdock Drive
Knoxville, TN 37932
(865) 671-5400

CALCULATION SHEET

Client/job	CORED Substation 800 Battery Study		
Mesa Task #	1330500		
Calculated by:	Mandy Elgan	Date:	6/17/2014
Checked by:	Keith Hurst	Date:	3/10/2015

5.3	Total Load Data	Set 1
5.3.1	**Total Continuous Loads**	**10.000**
5.3.2	Total Non Continuous Loads (trip)	220.352
5.3.3	Largest Close or SW current draw (Larger of 5.1.2.5 or 5.2.2.5)	4.6
5.3.4	**Total Non Continuous Loads (trip)** (Larger of 5.3.2 or 5.3.3)	**220.352**
5.3.5	**Total Random Loads**	**0**

(Calculation below was completed using C&D Battery Sizing Software)

Load Period	Load (amperes)	Change in Load (amperes) + Values	Change in Load (amperes) - Values	Duration of Load Period (minutes)	Time To End of Section (minutes)	Capacity Amperes per Pos Plates	Required Section Cell Size Positive Plates + Values	Required Section Cell Size Positive Plates - Values
SECTION 1								
1	10.000	10.000		480	480	6.2	1.614	
						SECTION 1 TOTAL :	**1.614**	
SECTION 2								
1	10.000	10.000		480	481	6.19	1.617	
2	44.350	34.350		1	1	71.86	0.478	
						SECTION 2 TOTAL :	**2.095**	
SECTION 2								
1	10.000	10.000		480	482	6.18	1.619	
2	44.350	34.350		1	1	70.47	0.487	
2	70.000	25.650		1	1	71.86	0.357	
						SECTION 2 TOTAL :	**2.463**	
SECTION 2								
1	10.000	10.000		480	485	6.15	1.627	
2	44.350	34.350		1	1	66.29	0.518	
2	70.000	25.650		1	1	67.68	0.379	
2	50.000	-20.000		3	3	69.07	-0.290	
						SECTION 2 TOTAL :	**2.234**	
RANDOM EQUIPMENT LOADS								
	0							

number obtained via C&D data

Maximum Size: 2.46 **+ Random Load Size:** 0.00 **= Base Design Size:** 2.46

X Temperature Correction: 0
X Design Margin: 1.10
X Aging Factor: 60
= Number of Positive Plates: 3.76

Cell Model: C&D 3DJ-200 or Equivalent **Nominal AH Rating: 200** **8 Hr Rating: 25**

Positive Plates: 4 **Strings Per System: 1** **Cell per Jar: 3**

5.4 Methodology & Recommendation

5.5.1 Methodology

The above calculation is based on a duty cycle of four distinct periods. The first period is the constant draw of the continuous current while the station is without an AC feed. We have assumed worst case. We have used an eight (8) hour period of time for this section as this has typically been used in the industry. Also, this period has the most affect on this type of battery and produces the most losses.

The next period includes all the continuous currents plus the current need to trip three breakers, one lockout relay, and DC spring motor for three breakers. This would be the scenario for a future design with a bus diff, which has a higher non-continuous load than the current design breaker failure, and all would occur within a minute of duration. The next period includes triping of all the MODs and the final

5.4.2 Recommendation

Mesa Associates recommends one sets of C&D 3DJ-200 or equivalent batteries. This battery will supply all needs for the existing configuration and be adequate for future build out of the communications system.

5.5 Battery Fault Current

Per IEEE, the maximum fault current a battery can produce is generally eight to ten times the one minute rating of the battery system. In the absence of exact data from the manufacturer, we will assume worst case and use ten times one minute rating. This should be used to size protective devices.

One minute rating of the battery system	287.4	(from C&D literature)
5.5.1 Maximum DC Fault Current Available	2874	

5.6 Charger Selection

5.6.1 Charger output=continuous load + ((1.1*8hr rating of battery)/hours to recharge) per IEEE

5.6.2	Total Continuous Loads	10.000
5.6.3	8 Hour Rating of Battery	25
5.6.4	Hours to Recharge	8
5.6.5	Required Charger Output	13.44

5.6.6 Battery Charger Recommendation

IEEE recommends time for recharge between 8 and 12 hours. Mesa also recommends standardizing sizes where possible with a minimum size of 20 amps, Universal input voltage, DNP 3.0 communications, and relay alarm outputs. Using this logic, a **Lamarche A75DE-20-125V-ABD-1-60L-46R-21P** charger (or equivalent) would be required. This model would include an input voltage of 240Vac and an output of 125Vdc and 20Adc, communications capability, and alarm relays. The total continuous current used in this calculation includes adequate capacity to allow for future build out.

Mesa Associates, Inc. Engineers & Consultants 10604 Murdock Drive Knoxville, TN 37932 (865) 671-5400 ***CALCULATION SHEET***	Client/job: CORED Substation 800 Battery Study Mesa Task #: 1330500 Calculated by: Mandy Elgan Date: 6/17/2014 Checked by: Keith Hurst Date: 3/10/2015

6.0 Room Exhaust

6.1 Assumptions

6.1.1 Lead acid batteries produce 0.016 cubic feet of hydrogen per cell, per hour at standard pressure

6.1.2 Percent of overcharge assumed during recharge is 20%

6.2 Calculate Hydrogen Concentration

Hydrogen Concentration	H =	9.6
H = ((C X O X G X A) / R) / 100		
C = number of cells	60	
O = percent of overcharge assumed during recharge, use 20% (20)	20	
G = Volume of hydrogen produced by one amp of charge. Use (0.016)	0.016	
A = 8-hour rated capacity of battery in amp hours	200	
R = Assume gas is released during last (4) hours of 8 hour charge	4	

6.3 Calculate Room Volume

Room Volume	V =	2629.69
W x L x H		
W = Width	22.5	
L = Length	13.75	
H = Height	8.5	

6.4 Ventilation Requirement

Ventilation Requirement	=	164.36	
V = R x P / H x 60 mins			
R = Room cu. ft.	2629.69		
P = Max percentage of hydrogen gas allowed	0.01		
H = Total hydrogen produced per hour	9.60		

6.5 Fan Requirement

Fan Requirement	=	960.00	cu ft per hour
Fan Size = R x 60 / V			
R = Room cu. ft.	2629.69		
V = Ventilation req'd	164.36		
	or	**16 CFM**	
Exising Fan rated (conservative assmption)	100	**cfm**	
Set existing fan to run minutes per hour	10	**Minutes/Hour**	

C&D TECHNOLOGIES, INC.
1400 UNION MEETING ROAD
BLUE BELL, PA 19422-0858
(215) 619-2700
FAX: (215) 619-7840

Title:	CORED Battery Study
Company:	CORED
Sized By:	Clifford Hurst
Date:	Tuesday, April 21, 2015
Reference No.:	Sub 900

Key Parameters:		Parallel Strings:	1
Number of Cells:	60	Minimum Temp:	60.0 F
Number of Jars:	20	Design Margin:	1.10
Cell Final Voltage:	1.75 vDC	Aging Factor:	1.25

Load Information

Profile:	Step Load	
	Load (amps)	Time (min)
Period 1	10	480
Period 2	72.43	1
Total Time:	8 hr. 1 min.	
AH Removed	81.21	
Random Load:	n/a	
Duration:	n/a	

Battery:

Model:	3DJ-200
Specific Gravity:	1.215
Type:	Flooded 20 year
Product Line:	DJ
Selection Criteria:	By Battery Type - Flooded 20 year
% of Requirement:	105.45 %
Number of Jars:	20
Jar Length:	8.09 in.
Jar Width:	13.58 in.
Jar Height:	15.22 in.
No. Plates:	9
Float vpc:	2.21 vDC
Max vpc:	2.33 vDC
Jar Weight:	139.00 lbs.
Battery Weight:	2,780.00 lbs.

The C&D Sizing Program adheres to the battery sizing methodologies found in the current versions of IEEE-485, Practice for Sizing Lead Acid Batteries for Stationery Applications and IEEE1184, Guide for Selection/Sizing of Batteries for Uninterruptible Power Systems

Battery Rack:

	Rack 1
Qty:	1
Model:	RDB0800-15EP1P
Drawing No.:	M-11414
Style:	1 Tier
Rails:	Powder Coated 'Painted' Rail
Rating:	EP1
Length:	15.00 Ft.
Width:	18.19 in.
Height:	16.69 in.

Per Rack Section

Rack Area:	22.74 sq. Ft.
Rack Weight:	210.00 lbs.

Per Battery String

Utilization:	95.44 %
Rack Area:	22.74 sq. Ft.
Rack Weight:	210.00 lbs.

FORM # BSP-A3 REV DATE 06/18/02

Tuesday, April 21, 2015

© 2015 C&D Technologies, Inc.

All critical calculations must be verified with C&D applications.
Specifications are subject to change without notice.

C&D TECHNOLOGIES, INC.
1400 UNION MEETING ROAD
BLUE BELL, PA 19422-0858
(215) 619-2700
FAX: (215) 619-7840

COMPANY: CORED
REF: Sub 900

DATE: 4/21/2015
SIZED BY: Clifford Hurst
IEEE STD.: 485-2010

LOWEST DESIGN TEMPERATURE	60.0 F	MINIMUM DESIGN CELL VOLTAGE	1.75	SIZING BASIS PLATE NOMENCLATURE	DJ

Load Period	Load (amperes)	Change in Load (amperes)		Duration of Load Period (minutes)	Time to End of Section (minutes)	Capacity Amperes per Pos. Plate	Required Section Cell Size Positive Plates	
		+ Values	- Values				+ Values	- Values
SECTION 1								
1	10.00	10.00		480	480	6.20	1.614	
						SECTION 1 TOTAL:	1.614	
SECTION 2								
1	10.00	10.00		480	481	6.19	1.617	
2	72.43	62.43		1	1	71.86	0.869	
						SECTION 2 TOTAL:	2.485	

MAXIMUM SELECTED SIZE	2.49	+ RANDOM LOAD SIZE	0.00	= Base Design Size	2.49
		BASE DESIGN MULTIPLIERS		X Temperature Correction	1.110
				X Design Margin	1.10
				X Aging Factor	1.25
				= NUMBER OF POSITIVE PLATE	3.79
POSITIVE PLATES	4	Strings per System	1	Cell Model	3DJ-200
				CELLS PER JAR	3

FORM # BSP-A1 REV DATE 3/21/05

Tuesday, April 21, 2015

© 2015 C&D Technologies, Inc.
All critical calculations must be verified with C&D applications.
Specifications are subject to change without notice.

Mesa Associates, Inc.
Engineers & Consultants
10604 Murdock Drive
Knoxville, TN 37932
(865) 671-5400

CALCULATION SHEET

Client/job	CORED Substation 900 Battery Study
Mesa Task #	1330500
Calculated by:	Mandy Elgan — Date: 6/17/2014
Checked by:	Keith Hurst — Date: 3/10/2015

1.0 Purpose

The purpose of the calculation is to size the substation battery and battery charger. The methodology is supported by IEEE Standard 485, "Recommended Practice for Sizing Lead Acid Batteries for Stationary Applications". The IEEE method is designed to cover continuous, non-continuous, and random loads.

2.0 Scope

This calculation documents the DC load requirements and verifies that the 125VDC battery and its charger capacity are not exceeded. This calculation will document the continuous loads, non-continuous loads, random loads, and the periods of operation. The required capacity of the charger will be determined using the IEEE-485 calculation method. The results of this calculation will identify the size and type of battery and battery charger required.

3.1 The Amp/Positive plate calculation method will be used.
3.2 A 1.10 design margin is used for unexpected load growth.
3.3 An aging factor of 1.25 will be used for battery decay to ensure a full life of the battery.
3.4 The minimum battery voltage for 125VDC system is 105 Volts.
3.5 The maximum battery voltage for 125VDC system is 140 Volts.

3.0 References

Single Line Diagram(s)
Relay Panel Front View(s)
Site Visit Notes and Photos

4.0 Design Input

Number of Cells	60
Design Margin	1.10
Aging Factor	1.25
Ambient Temp	60
Temp Factor	1.11

Electrolyte Temp. ºF	Electrolyte Temp. ºC	Cell Size Correction Factor	Electrolyte Temperature ºF	Electrolyte Temperature ºC	Cell Size Correction Factor
25	-3.9	1.52	80	26.7	0.98
30	-1.1	1.43	85	29.4	0.96
35	1.7	1.35	90	32.2	0.94
40	4.4	1.3	95	35	0.93
45	7.2	1.25	100	37.8	0.91
50	10	1.19	105	40.6	0.89
55	12.8	1.15	110	43.3	0.88
60	15.6	1.11	115	46.1	0.87
65	18.3	1.08	120	48.9	0.86
70	21.1	1.04	125	51.7	0.85
77	25	1			

Mesa Associates, Inc.
Engineers & Consultants
10604 Murdock Drive
Knoxville, TN 37932
(865) 671-5400

CALCULATION SHEET

Client/job	CORED Substation 900 Battery Study
Mesa Task #	1330500
Calculated by:	Mandy Elgan — Date: 6/17/2014
Checked by:	Keith Hurst — Date: 3/10/2015

5.0 Computation & Analysis

5.1 Existing Loads

5.1.1 Continuous Loads

5.1.1.1

Determine the amount of current constantly connected and energized, such as lights, digital relays, RTUs, power supplies, etc.

5.1.1.2 Continuous Load Data

Set 1

Device	Desc	Quantity	Amps ea.	Total Amps
(80) Undervoltage Relay		2	0.016	0.032
(50/51) Phase Overcurrent	GEC MCGG 22	9	0.016	0.144
(87) Differential Relay	SEL-587	6	0.06	0.36
(64) Overcurrent	GEC MCGG 22	5	0.016	0.08
Time Delay (62)	AG 7012NF	2	0.064	0.128
Indicating Light	ET-16	10	0.02	0.2

5.1.1.3 **Total Continuous Load** **0.944 A**

5.1.1.4 Continuous loads from battery charger inspection during site visit **2 A**

5.1.1.5

For an existing Station, the measured continuous load in line 5.1.1.4 can be used for documenting changes to the calculated continuous load. Assumptions must be attached to this calculation as to how the actual measured current affects the component calculation method, and while the calculated continuous load is being adjusted. When using the value from the Battery Reports, one must ensure all equipment is operating and the charger is not in the equalizing mode.

Mesa Associates, Inc.
Engineers & Consultants
10604 Murdock Drive
Knoxville, TN 37932
(865) 671-5400

CALCULATION SHEET

Client/job	CORED Substation 900 Battery Study		
Mesa Task #	1330500		
Calculated by:	Mandy Elgan	Date:	6/17/2014
Checked by:	Keith Hurst	Date:	3/10/2015

5.1.2 Non-Continuous Loads

5.1.2.1 Determine the maximum number of breakers that are likely to trip at one time such as Breaker Failure or Bus Differential. When calculating the total trip current, remember that every breaker may have a different tripping current and/or DC charging motor. Per IEEE Std. 485, "Although momentary loads may exist for only a fraction of a second, each is considered to last for a full minute because the instantaneous battery voltage drop for a given momentary load is essentially the same as the voltage drop after one minute".

5.1.2.2 Non-Continuous Load Data

Device	Quantity	Amps ea.	Total Amps
161KV Trip Coil	3	16	48
13.2KV Trip Coil	3	1.36	4.08
Annunciator Relay	48	0.024	1.152
BF LO Relay Electroswitch 7825DD	2	4.6	9.2

5.1.2.3 Total Non-Continuous Load **62.432**

5.1.2.4 Analyze the station and determine if any breakers use a DC closing solenoid or a DC powered switch. These devices can draw a great many amps and may exceed the value calculated in line 5.1.2.3. If more than one of these devices is present, then select the unit with the largest current requirement.

5.1.2.5 Close Breaker or Switch current draw 4.6

5.1.2.6 Total Non-continuous Load 62.432

5.1.3 Random Loads

5.1.3.1 This section calculates the loads that occur at random times, such as emergency pumps, heaters, etc

5.1.3.2 Random Load Data

Device	Desc	Quantity	Amps ea.	Total Amps
N/A				0

5.1.3.3 Total Random Loads 0

Mesa Associates, Inc.
Engineers & Consultants
10604 Murdock Drive
Knoxville, TN 37932
(865) 671-5400

CALCULATION SHEET

Client/job	CORED Substation 900 Battery Study
Mesa Task #	1330500
Calculated by:	Mandy Elgan — Date: 6/17/2014
Checked by:	Keith Hurst — Date: 3/10/2015

5.2 Future Loads

5.2.1 Future Continuous Loads

5.2.1.1

Determine the amount of current constantly connected and energized such as lights, digital relays, RTUs, power supplies, etc.

5.2.1.2 Future Continuous Load Data

Device	Desc	Quantity	Amps ea.	Total Amps
	SCADA System	1	3	3
	FO Dead-End or Head-End Boxes	1	5	5
OR	Repeater or Small Mesh Antennae	1	3	3

5.2.1.3 Total Future Cont. Load 8

5.2.2 Non-Continuous Loads

5.2.2.1 Determine the maximum number of breakers that are likely to trip at one time such as Breaker Failure or Bus Differential. When calculating the total trip current, remember that every breaker may have a different tripping current and/or DC charging motor. Per IEEE Std. 485, "Although momentary loads may exist for only a fraction of a second, each is considered to last for a full minute because the instantaneous battery voltage drop for a given momentary load is essentially the same as the voltage drop after one minute".

5.2.2.2 Future Non-Continuous Load Data

Device	Desc	Quantity	Amps ea.	Total Amps
	N/A			

5.2.2.3 Total Future NonCont. Load 0

5.2.2.4 Analyze the future station plans and determine if any breakers use a DC closing solenoid or a DC powered switch. These devices can draw a great many amps and may exceed the value calculated in line 5.1.2.3. If more than one of these devices is present, then select the unit with the largest current requirement.

5.2.2.5 Future Close Breaker or SW Current draw 0

5.2.2.6 Future Total Non-continuous Load 0
(Larger of lines 5.2.2.3 or 5.2.2.5)

5.2.3 Random Loads

5.2.3.1 This section calculates the loads that occur at random times, such as emergency pumps, heaters, etc.

5.1.3.2 Future Random Load Data

Device	Desc	Quantity	Amps ea.	Total Amps
	N/A			0

5.2.3.3 Total Future Random Loads 0

Mesa Associates, Inc.
Engineers & Consultants
10604 Murdock Drive
Knoxville, TN 37932
(865) 671-5400

CALCULATION SHEET

Client/job	CORED Substation 900 Battery Study
Mesa Task #	1330500
Calculated by:	Mandy Elgan — Date: 6/17/2014
Checked by:	Keith Hurst — Date: 3/10/2015

5.3	Total Load Data	Set 1
5.3.1	**Total Continuous Loads**	**10.000**
5.3.2	Total Non Continuous Loads (trip)	62.432
5.3.3	Largest Close or SW current draw (Larger of 5.1.2.5 or 5.2.2.5)	4.6
5.3.4	**Total Non Continuous Loads (trip)** (Larger of 5.3.2 or 5.3.3)	**62.432**
5.3.5	**Total Random Loads**	**0**

Set 1	Description	Amps	Duration (Min)
Section 1	Total Continuous Loads	10.000	480
Section 2	Total Continuous Loads + Total Non-Continuous Loads	72.432	1

(Calculation below was completed using C&D Battery Sizing Software)

Load Period	Load (amperes)	Change in Load (amperes) + Values	Change in Load (amperes) - Values	Duration of Load Period (minutes)	Time To End of Section (minutes)	Capacity Amperes per Pos Plates	Required Section Cell Size Positive Plates + Values	Required Section Cell Size Positive Plates - Values
SECTION 1								
1	10.000	10.000		480	480	6.2	1.617	
						SECTION 1 TOTAL :	**1.617**	
SECTION 2								
1	10.000	10.000		480	481	6.19	1.614	
2	72.432	62.432		1	1	71.86	0.869	
						SECTION 2 TOTAL :	**2.483**	
RANDOM EQUIPMENT LOADS								
	0							

number obtained via C&D data

Maximum Size: 2.49 **+ Random Load Size:** 0.00 **= Base Design Size:** 2.49

X Temperature Correction: 1.11
X Design Margin: 1.10
X Aging Factor: 1.25
= Number of Positive Plates: 3.79

Cell Model: C&D 3DJ-200 or Equivalent **Nominal AH Rating: 200** **8 Hr Rating: 25**

Positive Plates: 4 **Strings Per System: 1** **Cell per Jar: 3**

Mesa Associates, Inc.
Engineers & Consultants
10604 Murdock Drive
Knoxville, TN 37932
(865) 671-5400

CALCULATION SHEET

Client/job	CORED Substation 900 Battery Study		
Mesa Task #	1330500		
Calculated by:	Mandy Elgan	Date:	6/17/2014
Checked by:	Keith Hurst	Date:	3/10/2015

5.4 Methodology & Recommendation

5.5.1 Methodology

The above calculation is based on a duty cycle of two distinct periods. The first period is the constant draw of the continuous current while the station is without an AC feed. We have assumed worst case. We have used an eight (8) hour period of time for this section as this has typically been used in the industry. Also, this period has the most affect on this type of battery and produces the most losses.

The next period includes all the continuous currents plus the current need to trip six breakers, two lockout relays, and Annunciator. This would be the scenario for a future design with a bus diff, which has a higher non-continuous load than the current design breaker failure, and all would occur within a minute of duration. This would also include the trip of the 13kv breaker feeding the solar plant lines.

5.4.2 Recommendation

Mesa Associates recommends one sets of C&D 3DJ-200 or equivalent batteries. This battery will supply all needs for the existing configuration and be adequate for future build out of the communications system.

5.5 Battery Fault Current

Per IEEE, the maximum fault current a battery can produce is generally eight to ten times the one minute rating of the battery system. In the absence of exact data from the manufacturer, we will assume worst case and use ten times one minute rating. This should be used to size protective devices.

One minute rating of the battery system	287.4	(from C&D literature)
5.5.1 Maximum DC Fault Current Available	2874	

5.6 Charger Selection

5.6.1 Charger output=continuous load + ((1.1*8hr rating of battery)/hours to recharge) per IEEE

5.6.2	Total Continuous Loads	10.000
5.6.3	8 Hour Rating of Battery	25
5.6.4	Hours to Recharge	8
5.6.5	Required Charger Output	13.44

5.6.6 Battery Charger Recommendation

IEEE recommends time for recharge between 8 and 12 hours. Mesa also recommends standardizing sizes where possible with a minimum size of 20 amps, Universal input voltage, DNP 3.0 communications, and relay alarm outputs. Using this logic, a **Lamarche A75DE-20-125V-ABD-1-60L-46R-21P** charger (or equivalent) would be required. This model would include an input voltage of 240Vac and an output of 125Vdc and 20Adc, communications capability, and alarm relays. The total continuous current used in this calculation includes adequate capacity to allow for future build out.

Mesa Associates, Inc. Engineers & Consultants 10604 Murdock Drive Knoxville, TN 37932 (865) 671-5400 ***CALCULATION SHEET***	Client/job: CORED Substation 900 Battery Study Mesa Task #: 1330500 Calculated by: Mandy Elgan Date: 6/17/2014 Checked by: Keith Hurst Date: 3/10/2015

6.0 Room Exhaust

6.1 Assumptions

6.1.1 Lead acid batteries produce 0.016 cubic feet of hydrogen per cell, per hour at standard pressure

6.1.2 Percent of overcharge assumed during recharge is 20%

6.2 Calculate Hydrogen Concentration

Hydrogen Concentration	H =	9.6
H = ((C X O X G X A) / R) / 100		
C = number of cells		60
O = percent of overcharge assumed during recharge, use 20% (20)		20
G = Volume of hydrogen produced by one amp of charge. Use (0.016)		0.016
A = 8-hour rated capacity of battery in amp hours		200
R = Assume gas is released during last (4) hours of 8 hour charge		4

6.3 Calculate Room Volume

Room Volume	V =	4930
W x L x H		
W = Width		34
L = Length		14.5
H = Height		10

6.4 Ventilation Requirement

Ventilation Requirement	=	308.125	
V = R x P / H x 60 mins			
R = Room cu. ft.		4930	
P = Max percentage of hydrogen gas allowed		0.01	
H = Total hydrogen produced per hour		9.6	

6.5 Fan Requirement

Fan Requirement	=	960	cu ft per hour
Fan Size = R x 60 / V			
R = Room cu. ft.		4930	
V = Ventilation req'd		308.125	
	or		**16 CFM**
Exising Fan rated (conservative assmption)		100	**cfm**
Set existing fan to run minutes per hour		10	**Minutes/Hour**

C&D TECHNOLOGIES
Power Solutions

C&D® FLOODED SG&C

12-315-S

DJ Lead-Calcium Battery

FOR SWITCHGEAR & CONTROL APPLICATIONS
CAPACITIES FROM 110 TO 200 AMPERE-HOURS

DJ SERIES BATTERY

Every cell 100% capacity tested

C&D Technologies' flooded batteries are engineered to provide superior performance and reliability over the life of the product. These batteries are designed using proprietary techniques and quality components and materials for reduced maintenance and extended battery life.

APPLICATIONS

- Electric Utility Substations
- Manufacturing Facilities
  - Assembly Lines
  - Process Controls
  - Communication Systems
- Petrochemical Processing Plants
- Pipelines
- Emergency Systems

FEATURES & BENEFITS

RELIABILITY

- Time tested epoxy post seal and reliable tongue and groove jar-to-cover seal designs provide increased adhesive coverage area — offering unprecedented seal integrity during service
- Top suspended positive plate design allows free downward growth without pressure on jar, cover, or post seal — extending reliability and product life
- Recessed vent area to collect water and acid spills, keeping them away from posts and cover — lowering maintenance and clean-up costs
- Wrapped separator design extends cycle life — improving product reliability
- Enhanced post seal design

SAFE OPERATION

- Self extinguishing features (LOI >32) of flame retardant (FR) cover and jar material — providing added protection
- Low evaporation, flame arrestor vents protect against external source from igniting hydrogen gas within the cells — improving safety

COST SAVINGS

- Unique jar design facilitates installation
- Compact, optimized product size nets up to 40% floor space reduction — saving valuable space
- Angled posts use standard lead-plated copper connectors and improved post to connector contact — lowering resistance and allowing for quicker installation

The new 20-year design life DJ batteries incorporate these benefits in a transparent container for visual inspection of plates and individual cell voltage taps on the connector covers for cell voltage readings.

SPECIFICATIONS

Recommended float voltage range	2.20–2.25 volts per cell (1.215 specific gravity)
Specific gravity of electrolyte @77°F (25°C)	1.215 (standard)
Cover material – Standard	High impact, PVC, LOI>32, UL94-V0
Container material – Standard	Transparent, high-impact PVC, LOI>32, UL94-V0
Separator material – Standard	U-wrapped, microporous with fibrous mat
Terminal type	Hardened lead post
Safety vent	Flame arrestor / low evaporation type

C&D capacity tests every DJ battery to 100% of published rating which ensures 100% capacity out-of-the-box (no need to field cycle the batteries to reach rated capacity). This saves time and money for users.

SPECIFICATIONS

Nominal rates 1.215 specific gravity @ 77°F (25°C) (includes connector voltage drop) *

Amperes

Models	FV/Cell	1 min	15 min	30 min	1 hr	2 hr	3 hr	4 hr	5 hr	8 hr	12 hr
DJ-110	1.75	158.1	117.4	87.9	59.6	37.9	28.3	22.9	19.5	13.8	9.9
	1.78	139.3	105.0	80.1	55.5	35.9	27.0	22.1	18.8	13.3	9.7
	1.81	120.5	92.6	72.4	51.4	33.9	25.8	21.2	18.2	12.9	9.4
	1.85	94.9	78.2	62.4	44.8	30.6	23.9	19.8	17.0	12.1	8.8
DJ-155	1.75	226.3	168.0	125.8	85.4	54.3	40.5	32.8	27.9	19.5	14.2
	1.78	199.5	150.3	114.7	79.5	51.4	38.7	31.6	26.9	19.0	13.8
	1.81	172.6	132.5	103.6	73.6	48.5	37.0	30.4	26.0	18.5	13.5
	1.85	135.9	112.0	89.4	64.2	43.8	34.2	28.4	24.4	17.3	12.6
DJ-200	1.75	287.4	213.4	159.8	108.4	68.9	51.4	41.7	35.4	25.0	18.0
	1.78	253.3	190.8	145.7	100.9	65.3	49.2	40.2	34.2	24.1	17.6
	1.81	219.2	168.3	131.5	93.5	61.6	47.0	38.6	33.0	23.4	17.1
	1.85	172.6	142.2	113.5	81.5	55.6	43.5	36.1	31.0	22.0	15.9

Additional ratings and application information is available in the Battery Selection Program @ www.cdstandbypower.net

Note: Data based discharge from float at 77°F (25°C) in accordance with IEEE-450

SPECIFICATIONS

Type of battery	Part number	Cells per unit	Plates per cell	Overall dimensions			Approx. wt. lbs (kgs)		Electrolyte per cell gal. (l)
				L in (mm)	W in (mm)	H in (mm)*	Net filled	Dom. packed	
3DJ-110	CW17784-PVC	3	5	8.09 (205.5)	13.58 (344.9)	15.22 (386.6)	101 (46)	112 (51)	1.23 (4.66)
3DJ-155	CW17785-PVC	3	7				120 (54)	131 (59)	1.09 (4.13)
3DJ-200	CW17786-PVC	3	9				139 (63)	150 (68)	0.95 (3.60)
2DJ-110	CW17787-PVC	2	5				71 (32)	82 (37)	1.23 (4.66)
2DJ-155	CW17788-PVC	2	7				83 (38)	94 (43)	1.09 (4.13)
2DJ-200	CW17789-PVC	2	9				96 (44)	107 (49)	0.95 (3.60)

* 2 cells in a 3 cell jar. Use with 3 cell jars to obtain correct voltage.

DJ RACK SELECTION MATRIX

	Non-seismic racks			Seismic racks		
	1 Tier, 1 Row	2 Tier, 1 Row	2 Step	1 Tier, 1 Row	2 Tier, 1 Row	2 Step
48 V (8 Jars)	RDB0800-06P	RDB0801-03P	RDB0803-03P	RDB0800-06EP1P RDB0800-06EP2P	RDB0801-03EP1P RDB0801-03EP2P	RDB0803-03EP1P RDB0803-03EP2P
120 V (20 Jars)	RDB0800-15P	RDB0801-7.3P	RDB0803-7.3P	RDB0800-15EP1P RDB0800-15EP2P	RDB0801-7.3EP1P RDB0801-7.3EP2P	RDB0803-7.3EP1P RDB0803-7.3EP2P

3 Tier, 1 Row racks are also available.

C&D TECHNOLOGIES, INC.

1400 Union Meeting Road
P.O. Box 3053 • Blue Bell, PA 19422-0858
(215) 619-2700 • Fax (215) 619-7899 • (800) 543-8630
customersvc@cdtechno.com
www.cdtechno.com

Any data, descriptions or specifications presented herein are subject to revision by C&D Technologies, Inc. without notice. While such information is believed to be accurate as indicated herein, C&D Technologies, Inc. makes no warranty and hereby disclaims all warranties, express or implied, with regard to the accuracy or completeness of such information. Further, because the product(s) featured herein may be used under conditions beyond its control, C&D Technologies, Inc. hereby disclaims all warranties, either express or implied, concerning the fitness or suitability of such product(s) for any particular use or in any specific application or arising from any course of dealing or usage of trade. The user is solely responsible for determining the suitability of the product(s) featured herein for user's intended purpose and in user's specific application.

Copyright 2012 C&D TECHNOLOGIES, INC. Printed in U.S.A. 12-315-S 1012/CD

NOTICE:
THIS PRINT AND THE INFORMATION SHOWN THEREON IS THE PROPERTY OF C&D TECHNOLOGIES, INC. AND IS BEING FURNISHED AS A CONFIDENTIAL DISCLOSURE. IT MAY NOT BE DELIVERED TO OTHERS NOR REPRODUCED FOR THE GENERAL CIRCULATION WITHOUT THE WRITTEN APPROVAL OF C&D TECHNOLOGIES, INC.

ECN# 7019

REVISION HISTORY

ZONE	REV	DESCRIPTION	ECN#	REV'D	CHK'D	DATE	APPROVED
	1	ADDED 6.63 C-C RAIL DIM, ADDED DETAIL E, UPDATED FORMAT	10253	MR	EJL	01/21/03	D.HEIMER

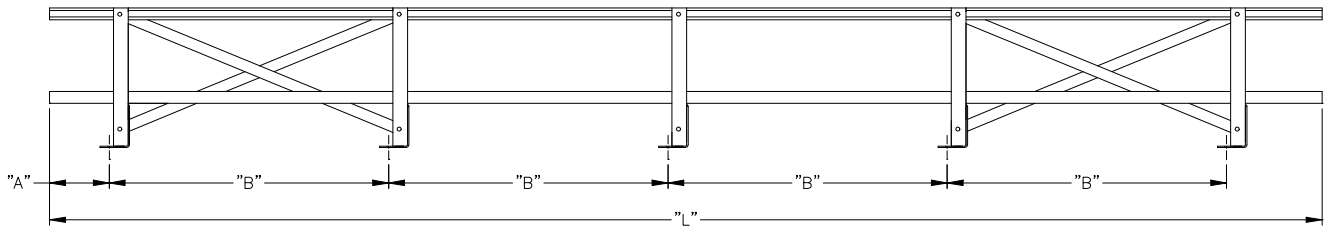

14' – 16' RACKS

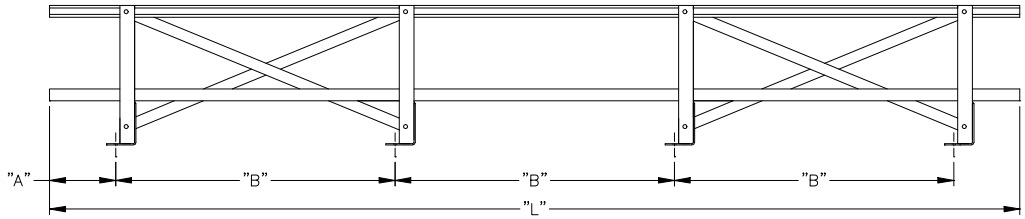

10' – 13' RACKS

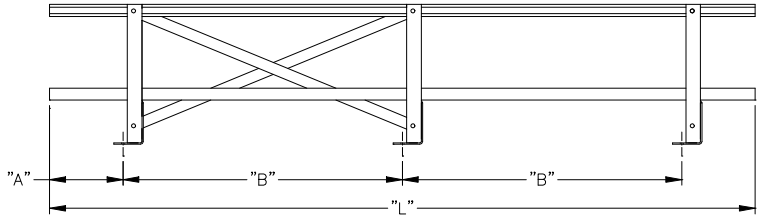

7' – 9' RACKS

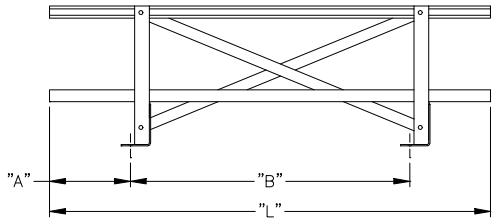

3' – 6' RACKS

NOTES: SEE SHEET 2 FOR BILL OF MATERIALS, NOTES AND ASSEMBLY DETAILS. BRACES ARE IN BACK BAYS ONLY.

UNLESS OTHERWISE SPECIFIED DIMENSIONS ARE IN INCHES. ± TOLERANCES ON:
DECIMALS X XX XXX ANGLES

THIRD ANGLE PROJECTION

MATERIAL

DRAWN	E.D.DODGE	04/22/96
CHECKED	M.PALENQUE	05/02/96
APPROVED	D.HEIMER	05/02/96
APPROVED		

FILE: M11414A

ALL SHEETS ARE THE SAME REVISION STATUS

C&D TECHNOLOGIES, INC.
1400 UNION MEETING ROAD, BLUE BELL, PA 19422-0858
www.cdtechno.com

TITLE "J/K", "DJ" SERIES, ONE TIER EP CAT 1 RACKS

SIZE	CAGE CODE	DRAWING NUMBER	REVISION
C		M11414	1

SCALE NTS SHEET 1 OF 2

12/2000

NOTICE:
THIS PRINT AND THE INFORMATION SHOWN THEREON IS THE PROPERTY OF C&D TECHNOLOGIES, INC. AND IS BEING FURNISHED AS A CONFIDENTIAL DISCLOSURE. IT MAY NOT BE DELIVERED TO OTHERS NOR REPRODUCED FOR THE GENERAL CIRCULATION WITHOUT THE WRITTEN APPROVAL OF C&D TECHNOLOGIES, INC.

ECN# 7019

REVISION HISTORY

ZONE	REV	DESCRIPTION	ECN#	REV'D	CHK'D	DATE	APPROVED
	1	ADDED 6.63" C-C RAIL DIM; ADDED DETAIL E; UPDATED FORMAT	10253	MR	EJL	01/21/03	D.HEIMER

BILL OF MATERIALS

16'	15'	14'	13'	12'	11'	10'	9'	8'	7'	6'	5'	4'	3'	ITEM	PART NO.	NAME	DESCRIPTION
5	5	5	4	4	4	4	3	3	3	2	2	2	2	1	RD02111	FRAME	STEEL, 2.00 X 1.50 X 1.50 X .12
4	4	4	4	4	4	4	4	4	4	4	4	4	4	2	RD00200G	RAIL	STEEL, 1.62 X 1.62 X "L"
4	4	4	4	4	4	4	4	4	4	4	4	4	4	3	RE02447	COVER	FR PLASTIC, 1.60 X 1.50 X "L"
2	2	2	2	2	2	2	2	2	2	2	2	2	2	4	RD00200G-13.50	RAIL	STEEL, 1.62 X 1.62 X 13.50
2	2	2	2	2	2	2	2	2	2	2	2	2	2	5	RE02447-13.50	COVER	FR PLASTIC, 1.60 X 1.50 X 13.50
32	32	32	28	28	28	28	24	24	24	20	20	20	20	6	PH01432P	BOLT	STEEL, .38-16 X 1.50. HH, GRD 5
22	22	22	20	20	20	20	18	18	18	16	16	16	16	7	PH00798P	WASHER	STEEL, .38 LOCK
32	32	32	28	28	28	28	24	24	24	20	20	20	20	8	PH00795P	NUT	STEEL, .38-16, SERRATED.
8	8	8	8	8	8	8	4	4	4	4	4	4	4	9	PH01983P	BOLT	STEEL, .50-13 X 1.50. HH, GRD 5
8	8	8	8	8	8	8	4	4	4	4	4	4	4	10	PH01985P	WASHER	STEEL, .50 LOCK
8	8	8	8	8	8	8	4	4	4	4	4	4	4	11	PH01984P	NUT	STEEL, .50-13 HEX
10	10	10	8	8	8	8	6	6	6	4	4	4	4	12	PH02248	WASHER	STEEL, .38, INTERNAL/EXTERNAL STAR
2	2	2	2	2	2	2	2	2	2	2	2	2	2	13	RD02092	BRACKET	STEEL, .25
2	2	2	2	2	2	2	2	2	2	2	2	2	2	14	RD02097	BRACKET	STEEL, .25
4	4	4	4	4	4	4	2	2	2	2	2	2	2	15	SEE CHART	BRACE	STEEL, 1.50 X .19
10	10	10	8	8	8	8	6	6	6	4	4	4	4	16	*RE03430	SPACER	STEEL, 1.50 X 1.63 X .25
SEE NOTE #7														17	RE02458	SPACER	FOAM, 9.50 X 9.50 X .50 THK, "J"
SEE NOTE #7														18	RE01641	SPACER	FOAM, 10.25 X 13.00 X .50 THK, "K"

*SEE NOTE #5

RACK DIMENSIONS					RACK PART NO.
RACK WT. (LBS.)	"L"	"A"	"B"	BRACE PART NO.	RDB-
75	3'	4.31	24	RE03421	800-03EP1
83	4'	4.31	36	RE03423	800-04EP1
90	5'	7.31	42	RE03425	800-05EP1
97	6'	13.31	42	RE03425	800-06EP1
118	7'	4.31	36	RE03423	800-07EP1
126	8'	4.31	42	RE03425	800-08EP1
132	9'	10.31	42	RE03425	800-09EP1
161	10'	4.31	36	RE03423	800-10EP1
167	11'	10.31	36	RE03423	800-11EP1
175	12'	7.31	42	RE03425	800-12EP1
181	13'	13.31	42	RE03425	800-13EP1
202	14'	10.31	36	RE03423	800-14EP1
210	15'	4.31	42	RE03425	800-15EP1
216	16'	10.31	42	RE03425	800-16EP1

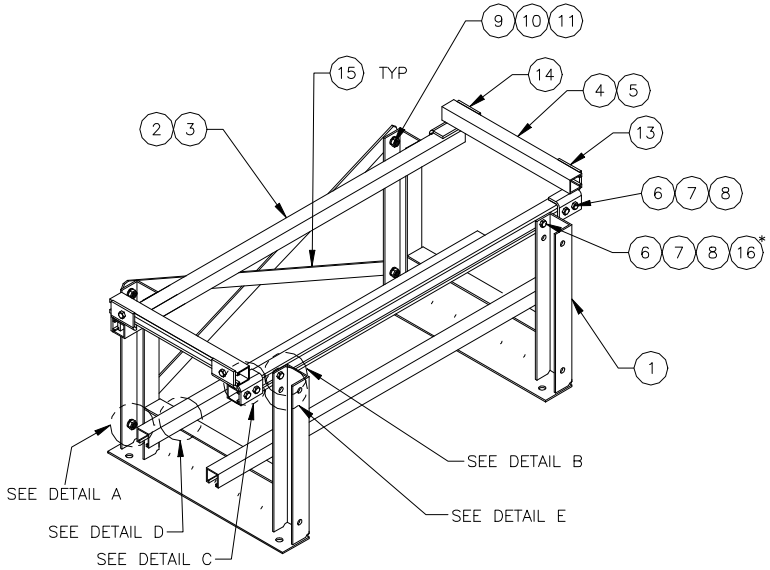

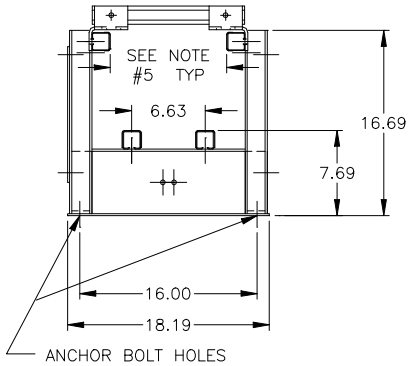

TYP END VIEW

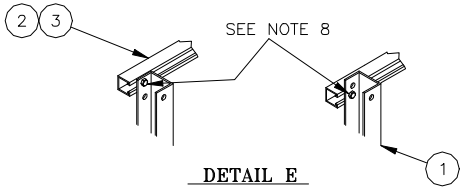

DETAIL E

NOTES:

1. COATING; ACID RESISTANT BAKED EPOXY POWDER PER C&D SPEC. C-1. STANDARD RAILS ARE GALVANIZED.
2. HOLES FOR RAILS ARE ø.44, HOLES FOR BRACES ARE ø.56 AND FLOOR MOUNTING HOLES ARE ø0.69.
3. SEE SHT. 1 FOR BRACING ARRANGEMENT.
4. SUFFIX PART NUMBER WITH "P" TO RECEIVE POWDER COATED RAILS IN PLACE OF STANDARD GALVANIZED RAILS (ie RDB0800-12EP1P).
5. ITEM #16 IS TO BE PLACED BETWEEN FRAME AND RAIL TO DECREASE THE INSIDE DIMENSION BETWEEN SIDE SUPPORT RAILS FOR "J" SERIES.
6. DRAWING IS NOT TO SCALE.
7. QTY OF ITEM #17 (FOR JC/XTJ/DJ UNITS) OR #18 (FOR KCT/KCR/XTK UNITS) IS (1) LESS THAN THE NUMBER OF BATTERY UNITS ORDERED.
8. USE LOWER SIDE RAIL MOUNTING HOLE FOR DJ UNITS, UPPER HOLE FOR ALL OTHER UNITS.

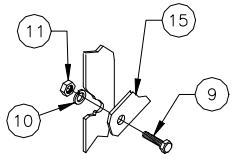

DETAIL A

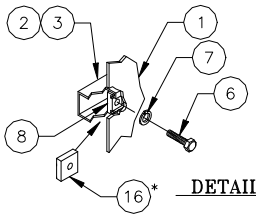

DETAIL B

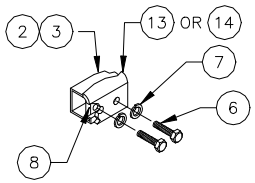

DETAIL C

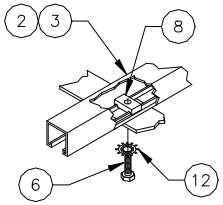

DETAIL D

UNLESS OTHERWISE SPECIFIED DIMENSIONS ARE IN INCHES. ± TOLERANCES ON:
DECIMALS X .XX .XXX .13 ANGLES
THIRD ANGLE PROJECTION
MATERIAL

DRAWN	E.D.DODGE	04/15/96
CHECKED	M.PALENQUE	05/02/96
APPROVED	D.HEIMER	05/02/96
APPROVED		

FILE: M11414B

ALL SHEETS ARE THE SAME REVISION STATUS

C&D TECHNOLOGIES, INC.
1400 UNION MEETING ROAD, BLUE BELL, PA 19422-0858
www.cdtechno.com

TITLE "J/K", "DJ" SERIES, ONE TIER EP CAT 1 RACKS

SIZE	CAGE CODE	DRAWING NUMBER	REVISION
C		M11414	1

SCALE NTS SHEET 2 OF 2

12/2000

NOTICE:
THIS PRINT AND THE INFORMATION SHOWN THEREON IS THE PROPERTY OF C&D TECHNOLOGIES, INC. AND IS BEING FURNISHED AS A CONFIDENTIAL DISCLOSURE. IT MAY NOT BE DELIVERED TO OTHERS NOR REPRODUCED FOR THE GENERAL CIRCULATION WITHOUT THE WRITTEN APPROVAL OF C&D TECHNOLOGIES, INC.

ECN# 7002

REVISION HISTORY

ZONE	REV	DESCRIPTION	ECN#	REV'D	CHK'D	DATE	APPROVED
	1	ADDDED 6.63" C-C RAIL DIM; ADDED DETAIL E. UPDATED FORMAT	10253	MR	EJL	01/21/03	D.HEIMER
	2	ADDED RDB0801-J SEP1 ADDED FLOOR CONTACT AREA	10003	EJL	RD	9/23/04	K. MALLET

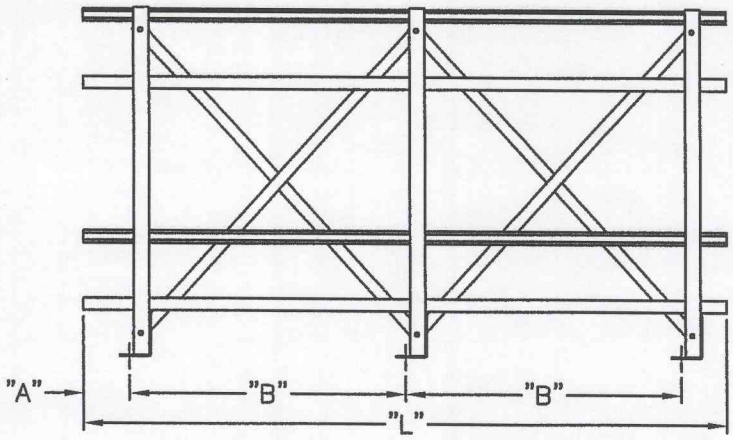

7' – 9' RACKS

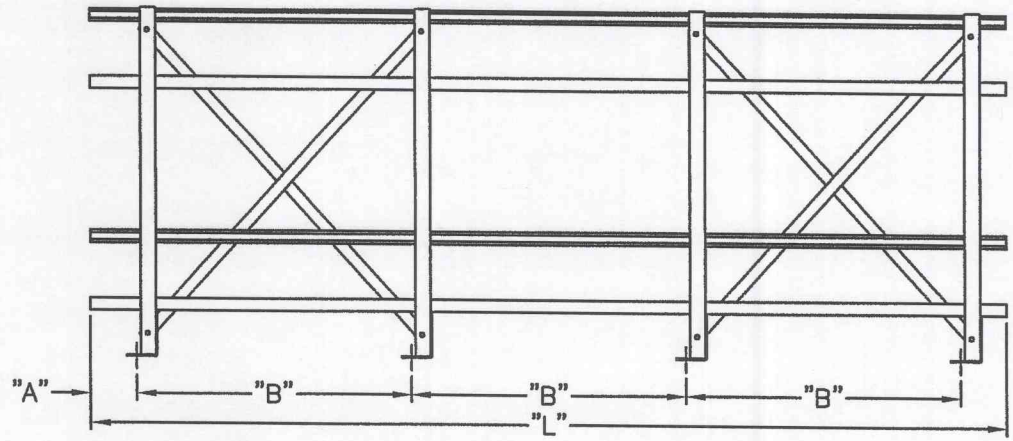

10' – 13' RACKS

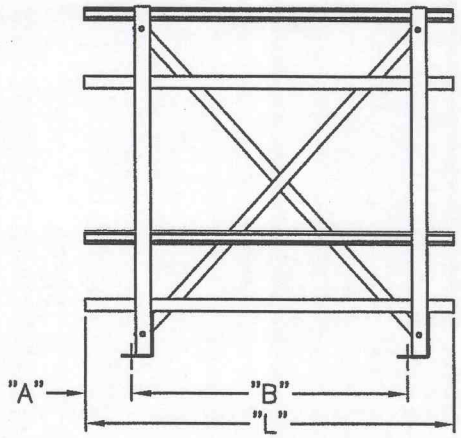

3' – 6' RACKS

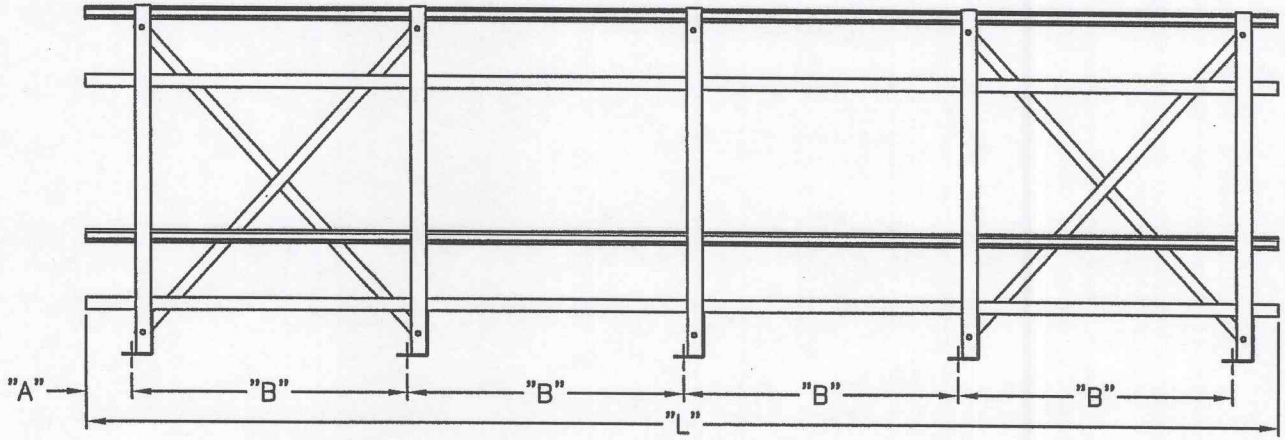

14' – 16' RACKS

PART NO. RDB0801-LEP1P

NOTES: SEE SHEET 2 FOR BILL OF MATERIALS, NOTES AND ASSEMBLY DETAILS.
BRACES ARE IN BACK BAYS ONLY.

UNLESS OTHERWISE SPECIFIED DIMENSIONS ARE IN INCHES. ± TOLERANCES ON: DECIMAL .XX .XXX ANGLE ±

THIRD ANGLE PROJECTION

MATERIAL

DRAWN	E.D.DODGE	04/11/98
CHECKED	M.PALENQUE	04/26/98
APPROVED	D.HEIMER	04/29/98
APPROVED		

FILE: M11417A

ALL SHEETS ARE THE SAME REVISION STATUS

C&D TECHNOLOGIES, INC.
1400 UNION MEETING ROAD, BLUE BELL, PA 19422-0858
www.cdtechno.com

TITLE: 2-TIER/1-ROW EP1 RACKS "DJ", "J/K" SERIES – PERP (PP)

SIZE	CAGE CODE	DRAWING NUMBER	REVISION
C		M11417	2

SCALE NTS SHEET 1 OF 2

12/2000

NOTICE:
THIS PRINT AND THE INFORMATION SHOWN THEREON IS THE PROPERTY OF C&D TECHNOLOGIES, INC. AND IS BEING FURNISHED AS A CONFIDENTIAL DISCLOSURE. IT MAY NOT BE DELIVERED TO OTHERS NOR REPRODUCED FOR THE GENERAL CIRCULATION WITHOUT THE WRITTEN APPROVAL OF C&D TECHNOLOGIES, INC.

ECN# 7002

REVISION HISTORY

ZONE	REV	DESCRIPTION	ECN#	REV'D	CHK'D	DATE	APPROVED
	1	ADDED 6.63" C-C RAIL DIM; ADDED DETAIL E; UPDATED FORMAT	10253	MR	EJL	01/21/03	D.HEIMER
	2	ADDED RDB0801-7.3EP1 ADDED FLOOR CONTACT AREA	10685	EJL	RD	5/28/04	R. MALLEY

BILL OF MATERIALS

16'	15'	14'	13'	12'	11'	10'	9'	8'	7.3'	7'	6'	5'	4'	3'	ITEM	PART NO.	NAME	DESCRIPTION
5	5	5	4	4	4	4	3	3	3	3	2	2	2	2	1	RD02112	FRAME	STEEL, 3.00 X 2.25 X 2.00 X .12
8	8	8	8	8	8	8	8	8	8	8	8	8	8	8	2	RD00200	RAIL	STEEL, 1.62 X 1.62 X "L"
8	8	8	8	8	8	8	8	8	8	8	8	8	8	8	3	RE02447	COVER	FR PLASTIC, 1.60 X 1.50 X "L"
4	4	4	4	4	4	4	4	4	4	4	4	4	4	4	4	RD00200-13.50	RAIL	STEEL, 1.62 X 1.62 X 13.50
4	4	4	4	4	4	4	4	4	4	4	4	4	4	4	5	RE02447-13.50	COVER	FR PLASTIC, 1.60 X 1.50 X 13.50
64	64	64	56	56	56	56	48	48	48	48	40	40	40	40	6	PH01432P	BOLT	STEEL, .38-16 X 1.50, HH, GRD 5
54	54	54	48	48	48	48	42	42	42	42	36	36	36	36	7	PH00798P	WASHER	STEEL, .38 LOCK
64	64	64	56	56	56	56	48	48	48	48	40	40	40	40	8	PH00795P	NUT	STEEL, .38-16, SERRATED,
8	8	8	8	8	8	8	6	6	6	6	4	4	4	4	9	PH01983P	BOLT	STEEL, .50-13 X 1.50, HH, GRD 5
8	8	8	8	8	8	8	6	6	6	6	4	4	4	4	10	PH01985P	WASHER	STEEL, .50 LOCK
8	8	8	8	8	8	8	6	6	6	6	4	4	4	4	11	PH01984P	NUT	STEEL, .50-13 HEX
10	10	10	8	8	8	8	6	6	6	6	4	4	4	4	12	PH02248	WASHER	STEEL, .38, INTERNAL/EXTERNAL STAR
4	4	4	4	4	4	4	4	4	4	4	4	4	4	4	13	RD02092	BRACKET	STEEL, .25
4	4	4	4	4	4	4	4	4	4	4	4	4	4	4	14	RD02097	BRACKET	STEEL, .25
4	4	4	4	4	4	4	4	4	4	4	2	2	2	2	15	SEE CHART	BRACE	STEEL, 1.50 X .19
20	20	20	16	16	16	16	12	12	12	12	8	8	8	8	16	*RE03430	SPACER	STEEL, 1.50 X 1.63 X .25
SEE NOTE #7															17	RE02458	SPACER	FOAM, 9.50 X 9.50 X .50 THK, "J"
SEE NOTE #7															18	RE01641	SPACER	FOAM, 10.25 X 13.00 X .50 THK, "K"

* SEE NOTE #5.

RACK DIMENSIONS					RACK PART NO.	FLOOR CONTACT AREA (SQ. INCHES)
RACK WT. (LBS.)	"L"	"A"	"B"	BRACE PART NO.	RDB-	
160	3'	4.56	24	RE03431	801-03EP1P	146.5
175	4'	4.56	36	RE03428	801-04EP1P	146.5
190	5'	7.56	42	RE03429	801-05EP1P	146.5
205	6'	13.56	42	RE03429	801-06EP1P	146.5
260	7'	4.56	36	RE03428	801-07EP1P	219.8
260	7.3'	6.25	36	RE03428	801-7.3EP1P	219.8
275	8'	4.56	42	RE03429	801-08EP1P	219.8
290	9'	10.56	42	RE03429	801-09EP1P	219.8
340	10'	4.56	36	RE03428	801-10EP1P	293.1
355	11'	10.56	36	RE03428	801-11EP1P	293.1
370	12'	7.56	42	RE03429	801-12EP1P	293.1
385	13'	13.56	42	RE03429	801-13EP1P	293.1
430	14'	10.56	36	RE03428	801-14EP1P	366.4
445	15'	4.56	42	RE03429	801-15EP1P	366.4
460	16'	10.56	42	RE03429	801-16EP1P	366.4

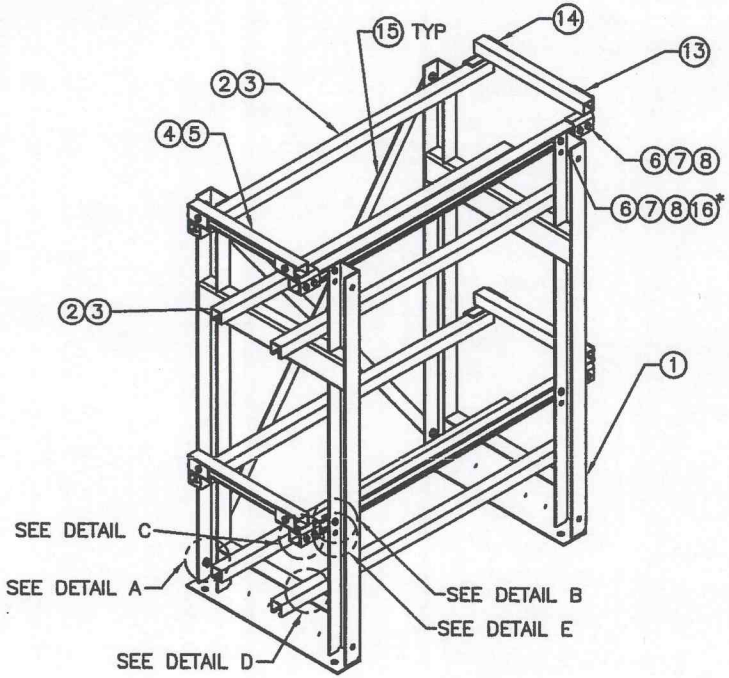

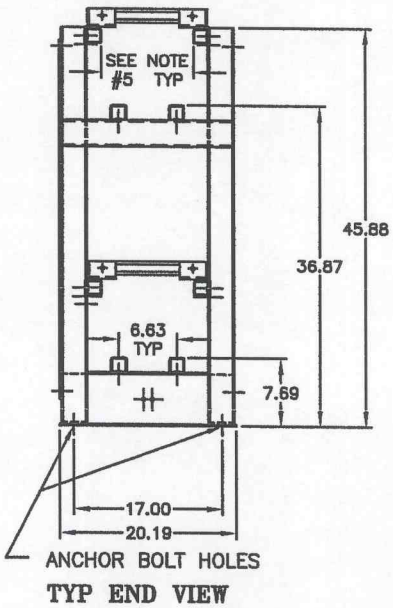

TYP END VIEW

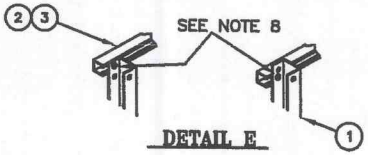

DETAIL E

NOTES:

1. COATING; ACID RESISTANT BAKED EPOXY POWDER PER C&D SPEC. C-1.
2. HOLES FOR RAILS ARE ø.44, HOLES FOR BRACES ARE ø.56 AND FLOOR MOUNTING HOLES ARE ø0.69.
3. SEE SHT. 1 FOR BRACING ARRANGEMENT.
4. SUFFIX PART NUMBER WITH "P" TO RECEIVE POWDER COATED RAILS IN PLACE OF STANDARD GALVANIZED RAILS (ie RDB0801-12EP1P).
5. ITEM #16 IS TO BE PLACED BETWEEN FRAME AND RAIL TO DECREASE THE INSIDE DIMENSION BETWEEN SIDE SUPPORT RAILS FOR "J" SERIES.
6. DRAWING IS NOT TO SCALE.
7. QTY OF ITEM #17 (FOR JC/XTJ/DJ UNITS) OR #18 (FOR KCT/KCR/XTK UNITS) IS (2) LESS THAN THE NUMBER OF BATTERY UNITS ORDERED.
8. USE LOWER SIDE RAIL MOUNTING HOLE FOR DJ UNITS, UPPER HOLE FOR ALL OTHER UNITS.

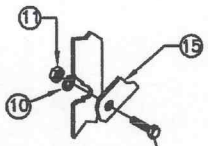

DETAIL A
REVERSE

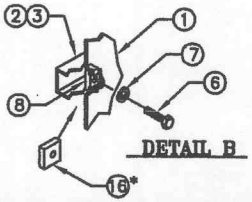

DETAIL B

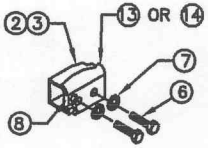

DETAIL C

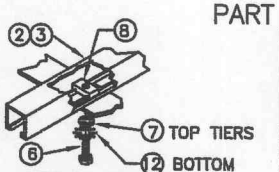

DETAIL D

PART NO. RDB0801-LEP1P

UNLESS OTHERWISE SPECIFIED DIMENSIONS ARE IN INCHES & TOLERANCES ON:
DECIMALS: X .13 XX XXX ANGLES
THIRD ANGLE PROJECTION
MATERIAL

DRAWN	E.D.DODGE	04/15/98
CHECKED	M.PALENQUE	04/28/98
APPROVED	D.HEIMER	04/29/98
APPROVED		

FILE: M11417B

ALL SHEETS ARE THE SAME REVISION STATUS

C&D TECHNOLOGIES, INC.
1400 UNION MEETING ROAD, BLUE BELL, PA 19422-0858
www.cdtechno.com

TITLE: 2-TIER/1-ROW EP1 RACKS "DJ", "J/K" SERIES - PERP (PP)

SIZE	CAGE CODE	DRAWING NUMBER	REVISION
C		M11417	2

SCALE NTS SHEET 2 OF 2

12/2000

NOTICE:
THIS PRINT AND THE INFORMATION SHOWN THEREON IS THE PROPERTY OF CAD TECHNOLOGIES, INC. AND IS BEING FURNISHED AS A CONFIDENTIAL DISCLOSURE. IT MAY NOT BE DELIVERED TO OTHERS NOR REPRODUCED FOR THE GENERAL CIRCULATION WITHOUT THE WRITTEN APPROVAL OF CAD TECHNOLOGIES, INC.

ECN #7019

REVISION HISTORY

ZONE	REV	DESCRIPTION	ECN#	REV'D	CHK'D	DATE	APPROVED
	2	ADDED RDB0803-7.3EP1 ADDED FLOOR CONTACT AREA	10685	E.J.L.	RD	5/28/04	R. MALLEY
	3	REVISED NOTES; REVISED VIEWS OF RACKS	10776	E.J.L.	RD	8/27/04	D. HEIMER

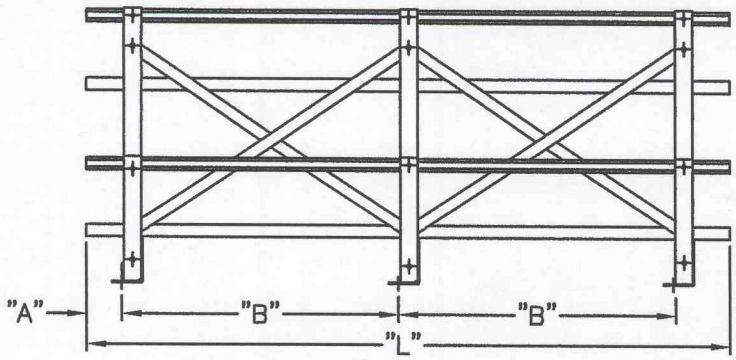

7' – 9' RACKS

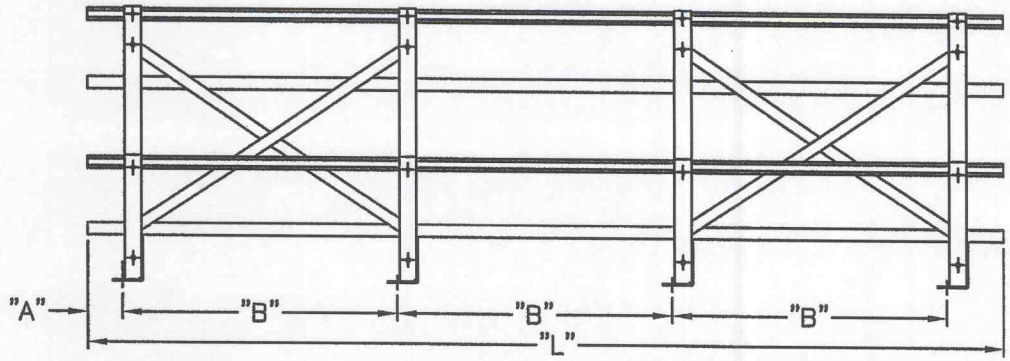

10' – 13' RACKS

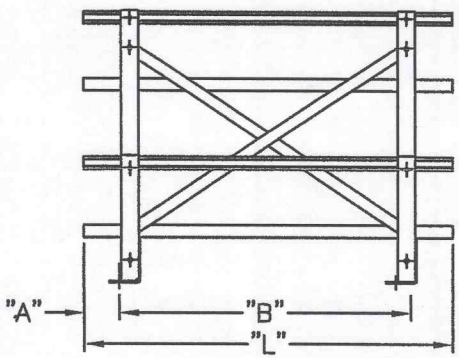

3' – 6' RACKS

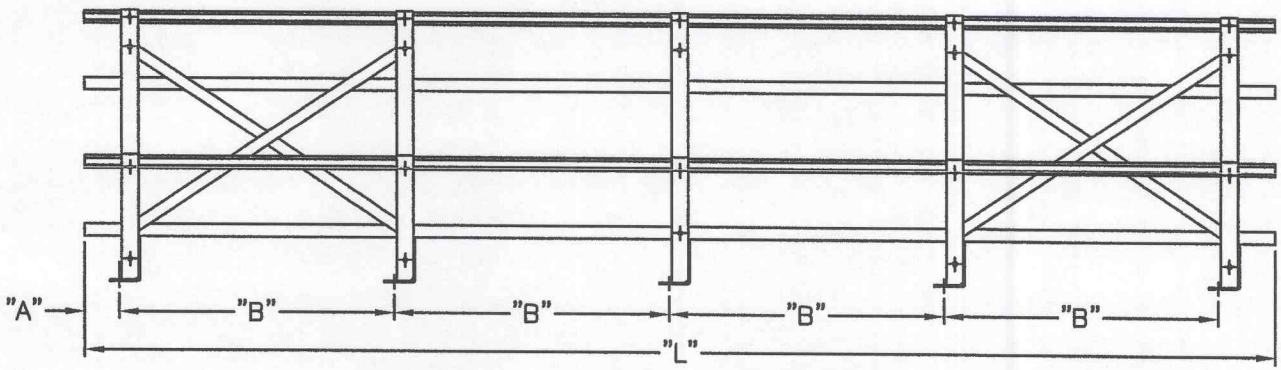

14' – 16' RACKS

PART NO. RDB0803-LEP1P

NOTES: SEE SHEET 2 FOR; BILL OF MATERIALS, NOTES AND ASSEMBLY DETAILS.
BRACES ARE IN CENTER BAYS ONLY.

UNLESS OTHERWISE SPECIFIED DIMENSIONS ARE IN INCHES & TOLERANCES ON:
LENGTH ANGLE
X .XX .XXX
THIRD ANGLE PROJECTION
MATERIAL

DRAWN	E.D.DODGE	04/12/96
CHECKED	M.PALENQUE	05/01/96
APPROVED	D.HEIMER	05/06/96
APPROVED		

FILE: M11423A

ALL SHEETS ARE THE SAME REVISION STATUS

CAD TECHNOLOGIES, INC.
1400 UNION MEETING ROAD, BLUE BELL, PA 19422-0858
www.cadtechno.com

TITLE: 2-STEP EP1 RACKS "DJ", "J" & "K" SERIES – PERP (PP)

SIZE	CAGE CODE	DRAWING NUMBER	REVISION
C		M11423	3

SCALE NTS SHEET 1 OF 2

12/2000

NOTICE:
THIS PRINT AND THE INFORMATION SHOWN THEREON IS THE PROPERTY OF C&D TECHNOLOGIES, INC. AND IS BEING FURNISHED AS A CONFIDENTIAL DISCLOSURE. IT MAY NOT BE DELIVERED TO OTHERS NOR REPRODUCED FOR THE GENERAL CIRCULATION WITHOUT THE WRITTEN APPROVAL OF C&D TECHNOLOGIES, INC.

ECN #7019

REVISION HISTORY

ZONE	REV	DESCRIPTION	ECN#	REV'D	CHK'D	DATE	APPROVED
	2	ADDED RDB0803-EP1	10685	EJL	RD	5/28/04	R. MALLEY
	3	REVISED NOTES; REVISED VIEW OF RACKS	10776	EJL	RD	8/27/04	D. HEIMER

BILL OF MATERIALS

16'	15'	14'	13'	12'	11'	10'	9'	8'	7.3'	7'	6'	5'	4'	3'	ITEM	PART NO.	NAME	DESCRIPTION
5	5	5	4	4	4	4	3	3	3	3	2	2	2	2	1	RD02114	FRAME	STEEL, 3.00 X 2.25 X 2.00 X .12
8	8	8	8	8	8	8	8	8	8	8	8	8	8	8	2	RD00200	RAIL	STEEL, 1.62 X 1.62 X "L"
8	8	8	8	8	8	8	8	8	8	8	8	8	8	8	3	RE02447	COVER	FR PLASTIC, 1.60 X 1.50 X "L"
4	4	4	4	4	4	4	4	4	4	4	4	4	4	4	4	RD00200-13.50	RAIL	STEEL, 1.62 X 1.62 X 13.50
4	4	4	4	4	4	4	4	4	4	4	4	4	4	4	5	RE02447-13.50	COVER	FR PLASTIC, 1.60 X 1.50 X 13.50
64	64	64	56	56	56	56	48	48	48	48	40	40	40	40	6	PH01432P	BOLT	STEEL, .38-16 X 1.50, HH, GRD 5
54	54	54	48	48	48	48	42	42	42	42	36	36	36	36	7	PH00798P	WASHER	STEEL, .38 LOCK
64	64	64	56	56	56	56	48	48	48	48	40	40	40	40	8	PH00795P	NUT	STEEL, .38-16, SERRATED,
8	8	8	8	8	8	8	6	6	6	6	4	4	4	4	9	PH01983P	BOLT	STEEL, .50-13 X 1.50, HH, GRD 5
8	8	8	8	8	8	8	6	6	6	6	4	4	4	4	10	PH01985P	WASHER	STEEL, .50 LOCK
8	8	8	8	8	8	8	6	6	6	6	4	4	4	4	11	PH01984P	NUT	STEEL, .50-13 HEX
10	10	10	8	8	8	8	6	6	6	6	4	4	4	4	12	PH02248	WASHER	STEEL, .38, INTERNAL/EXTERNAL STAR
4	4	4	4	4	4	4	4	4	4	4	4	4	4	4	13	RD02092	BRACKET	STEEL, .25
4	4	4	4	4	4	4	4	4	4	4	4	4	4	4	14	RD02097	BRACKET	STEEL, .25
4	4	4	4	4	4	4	4	4	4	4	2	2	2	2	15	SEE CHART	BRACE	STEEL, 1.50 X .19
20	20	20	16	16	16	16	12	12	21	21	8	8	8	8	16	*RE03430	SPACER	STEEL, 1.50 X 1.63 X .25
SEE NOTE #7															17	RE02458	SPACER	FOAM, 9.50 X 9.50 X .50 THK, "J"
SEE NOTE #7															18	RE01641	SPACER	FOAM, 10.25 X 13.00 X .50 THK, "K"

*SEE NOTE #5

RACK DIMENSIONS					RACK PART NO.	FLOOR CONTACT AREA (SQ. INCHES)
RACK WT. (LBS.)	"L"	"A"	"B"	BRACE PART NO.	RDB-	
177	3'	4.56	24	RE03672	803-03EP1P	269.5
191	4'	4.56	36	RE04293	803-04EP1P	269.5
204	5'	7.56	42	RE04294	803-05EP1P	269.5
216	6'	13.56	42	RE04294	803-06EP1P	269.5
287	7'	4.56	36	RE04293	803-07EP1P	404.3
287	7.3'	6.25	36	RE04293	803-7.3EP1P	404.3
301	8'	4.56	42	RE04294	803-08EP1P	404.3
313	9'	10.56	42	RE04294	803-09EP1P	404.3
376	10'	4.56	36	RE04293	803-10EP1P	539.1
388	11'	10.56	36	RE04293	803-11EP1P	539.1
402	12'	7.56	42	RE04294	803-12EP1P	539.1
415	13'	13.56	42	RE04294	803-13EP1P	539.1
477	14'	10.56	36	RE04293	803-14EP1P	673.9
491	15'	4.56	42	RE04294	803-15EP1P	673.9
503	16'	10.56	42	RE04294	803-16EP1P	673.9

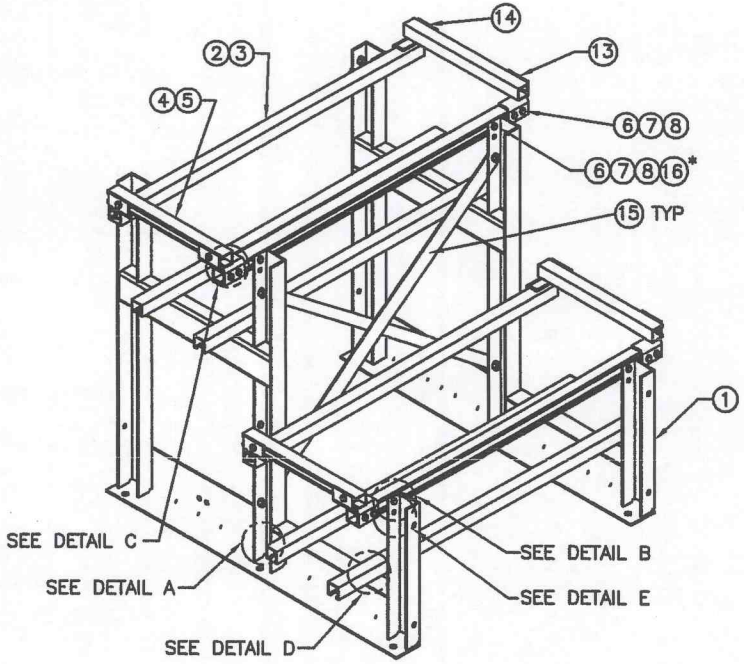

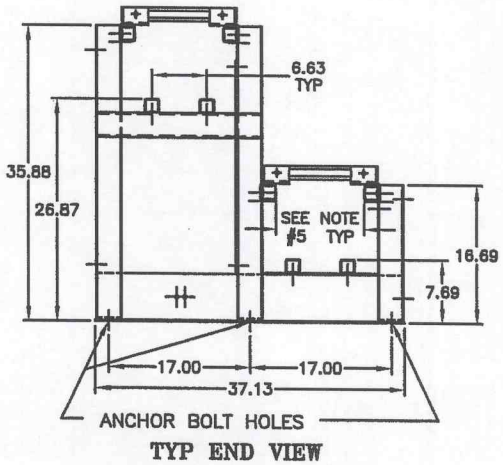

TYP END VIEW

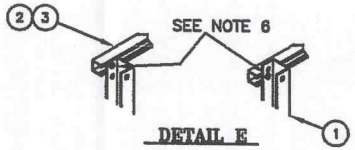

DETAIL E

NOTES:
1. COATING; ACID RESISTANT BAKED EPOXY POWDER PER C&D SPEC. C-1.
2. HOLES FOR RAILS ARE ø.44, HOLES FOR BRACES ARE ø.56 AND FLOOR MOUNTING HOLES ARE ø0.69.
3. SEE SHT. 1 FOR BRACING ARRANGEMENT.
4. ITEM #16 IS TO BE PLACED BETWEEN FRAME AND RAIL TO DECREASE THE INSIDE DIMENSION BETWEEN SIDE SUPPORT RAILS FOR "J" SERIES.
5. QTY OF ITEM #17 (FOR JC/XTJ/DJ UNITS) OR #18 (FOR KCT/KCR/XTK UNITS) IS (2) LESS THAN THE NUMBER OF BATTERY UNITS ORDERED.
6. USE LOWER SIDE RAIL MOUNTING HOLE FOR DJ UNITS, UPPER HOLE FOR ALL OTHER UNITS. (SEE DETAIL E)

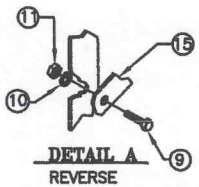

DETAIL A
REVERSE

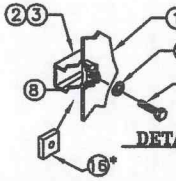

DETAIL B

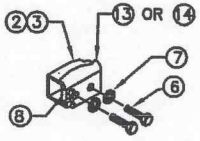

DETAIL C

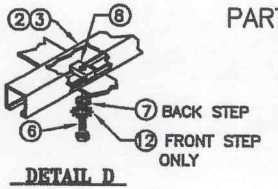

DETAIL D

PART NO. RDB0803-LEP1P

UNLESS OTHERWISE SPECIFIED DIMENSIONS ARE IN INCHES. ± TOLERANCES ON: DECIMALS X .XX .XXX ANGLES

THIRD ANGLE PROJECTION

MATERIAL

DRAWN	E.D.DODGE	04/12/96
CHECKED	M.PALENQUE	05/01/96
APPROVED		
	D.HEIMER	05/06/96
APPROVED		

FILE: M11423B

ALL SHEETS ARE THE SAME REVISION STATUS

C&D TECHNOLOGIES, INC.
1400 UNION MEETING ROAD, BLUE BELL, PA 19422-0858
www.cdtechno.com

TITLE: 2-STEP EP1 RACKS "DJ", "J" & "K" SERIES - PERP (PP)

SIZE	CAGE CODE	DRAWING NUMBER	REVISION
C		M11423	3

SCALE NTS | SHEET 2 OF 2

12/2000

A75D / A75DE Series

SCR Battery Charger / Battery Eliminator

Standard A75DE Unit Shown Above

SCR Battery Charger with Digital Display

The La Marche Model A75D/A75DE Series Battery Chargers are engineered for the demanding requirements of Switchgear, Process Control, Oil Exploration and other DC power applications.

Powered by solid state SCR technology, the A75D/A75DE series battery charger / battery eliminator has +/-0.5% DC voltage regulation from no load to full load over the specified input voltage, frequency and ambient temperature ranges.

These chargers are available in DC output voltages of 24, 48 and 130VDC with DC output currents from 6-500 amps. Single phase or three phase chargers can be powered with 120, 208, 240, 480 or 600 VAC input with a frequency of 60Hz +/-5%. Please consult factory for any special input and output requirements not mentioned above.

The La Marche A75D/A75DE chargers provide value added features such as AC/DC breakers, LCD display with text readout alarm LED's and form "C" alarm contacts. Optional communication protocols are also available with this battery charger.

Designed to meet NEMA PE5 and UL 1012 safety standards.

Standard Features

- A75D - Filtered Battery Charger
- A75DE - Filtered Battery Charger / Battery Eliminator
- SCR Technology
- Automatic AC Voltage Compensation
- AC & DC Surge Protection (MOV)
- AC Input Breaker / DC Output Breaker
- Internal Temperature Compensation
- Float / Equalize Mode Switch
- Separate Float and Equalize Adjustments
- Adjustable Current Limit 50 to 110% (factory set at 105%)
- +/-0.5% DC Voltage Regulation
- Load Sharing
- LCD Display for DC Voltage, DC Current & Alarms
- LED Indications
  - Float / Equalize
  - AC "ON"
  - AC Failure
  - Summary Alarm
  - Low DC Current
  - Over Load / Current Limit
  - Low DC Voltage
  - Battery End of Discharge
  - High DC Voltage
  - High DC Voltage Shutdown
  - Positive & Negative Ground Detection
- Remote Annunciation 2 Form "C" Contacts
  - AC Failure
  - Summary Alarm
  - (See Optional Accessories For Additional Alarm Contacts)
- Equalize Timer - adjustable from 1-144 hours with five selectable modes of operation (manual, automatic every 7, 14 or 30 days and equalize after sensing a low DC voltage)
- UL 1012 & CUL (Three phase units pending UL approval)
- 3-Year Warranty

MADE IN U.S.A.
Specifications subject to change without notice
P25-DSA75D-1
ECN 20715
08/14

La Marche Mfg. (A U.S. Company)
106 Bradrock Drive, Des Plaines, IL 60018
Tel: 847.299.1188 Fax: 847.299.3061
sales@lamarchemfg.com
www.lamarchemfg.com

Specifications

ELECTRICAL

- **AC Input Operating Range**
  Voltage range: +10, -12% from nominal
  Frequency range: 60Hz +/-5%
  (50Hz Consult Factory)

- **Single Phase Voltages:**
  120, 208, 240, 480 or 600 VAC
  (Tap selectable 120/208/240 on units up to 25 amps output. All other units must specify single input voltage)

- **Three Phase Voltages:**
  208, 240, 480 or 600 VAC

- **DC Output**
  24, 48 & 130 VDC
  6 to 500 amps

- **Output Filtering (with or without batteries):**

	24V	48V	130V
A75D Filtered	240mV (1%)	480mV (1%)	2.6V (2%)
A75DE Eliminator	30mV	30mV	30mV(1ph) 100mV(3ph)

- **DC Voltage Regulation** Steady-State
  +/- 0.5% of setting from no load to full load over the specified input voltage, frequency and ambient temperature ranges.

DC Output Voltage Range

	Volts		Cells	
	Float	Equalize	Lead Acid	Ni-Cad
24V	23-29.5	24-31	11-13L	17-20N
48V	46-57	48-61	22-26L	33-39N
130V	115-140	123-145	53-62L	83-93N

Note: Typical cell ranges are based on the following:
Lead Acid 2.17 vpc Float, 2.33 vpc Equalize
NiCad 1.44 vpc Float, 1.55 vpc Equalize
VRLA 2.25 vpc Float, 2.27 vpc Equalize

- **Dynamic Response (On Battery)**
  Maximum Voltage Transient will not exceed +/- 5% of initial steady-state voltage for a step change from 20 to 100% of the full rated load. Recovery to steady-state voltage regulation does not exceed 200ms and all transient behavior disappears within 500ms.

- **Audible Noise**
  Less than 65dBA at any point 5 feet from any vertical surface of the enclosure.

- **Load Sharing**
  Load sharing terminal located inside of unit. When connected, identical La Marche A75D/DE units are forced to share the load within +/- 5% for individual unit outputs greater than 15% of the rated output.

PROTECTION

- **Current Walk-in**
  The output current will gradually increase after the charger is turned on, eliminating surges and overshoot.

- **Current Limit**
  Electronic current limiting control circuitry provides for an adjustable value of 50 to 110% of the rated output current. Factory set at 105%.

- **AC Breaker**
  Single Phase units are equipped with a 2-pole circuit breaker (10KAIC @ up to 240VAC / 14KAIC 480 / 600 VAC).
  Three Phase units are equipped with a 3-pole circuit breaker. (10KAIC @ up to240VAC / 5KAIC 480 / 600 VAC).

- **DC Breaker**
  Standard units are equipped with a 2-pole circuit breaker. (7.5KAIC @ 24/48VDC & 5KAIC @ 130VDC).

ENVIRONMENTAL

- **Operating Temperature**
  0 to 50° C (32 to 122° F)

- **Storage Temperature**
  -40 to 85° C (-40 to 185° F)

- **Relative Humidity**
  0 to 95% (non-condensing)

- **Cooling**
  Convection Cooled

ENCLOSURES

- **Dimensions**
  Overall dimensions and weights are listed on the last page. Case specifications are subject to change due to innovative product development and design. When space requirements are critical, please consult the factory.

- **Mounting**
  Floor, wall or rack mounting is available; see case specifications on page 4 for details.

- **Finish**
  Pretreated with three step iron phosphate wash and deionized rinse. Finished with environmentally safe water based ANSI 61 gray baked enamel.

Unit Front:

A75D/DE model units are provided with a user friendly LCD Display for along with 13 LED indicators and two individual potentiometers Float/ Equalize charging rates.

Optional Accessories

01C 2 - Pole High Interrupting Capacity AC Breaker*
65KAIC @ 240VAC / 35KAIC @ 480VAC / 18KAIC @ 600 VAC

01D 2 - Pole High Interrupting Capacity AC Breaker*
100KAIC @ 240VAC / 65KAIC @ 480VAC / 25 KAIC @ 600VAC

01F 3-Pole High Interrupting Capacity AC Breaker*
65KAIC @ 240 VAC/ 25KAIC @ 480 VAC / 18KAIC @ 600 VAC

01G 3-Pole High Interrupting Capacity AC Breaker*
100KAIC @ 240 VAC/ 65KAIC @ 480 VAC / 25KAIC @ 600 VAC

* Only available for units with current draws above 8 amps

47C DC Breaker 10KAIC

20Q Equalize Fan Control Relay

217 Reverse Polarity Protection & LED

38D Copper Ground Bus Bar

11L Lightning Arrestor

102 Blocking Diode

11W External Temperature Probe 22ft

11Y External Temperature Probe 100ft

09C I.D Tags - White text on black background

09V I.D Tags - Black text on white background

09W Heat Shrink Wire Markers with Electrical Schematic

46R Discrete Alarm Relays
- Positive Ground
- Negative Ground
- High DC Volts
- Charger Failure
- Low DC Volts
- Low DC Amps
- Battery End of Discharge
- High Voltage Shutdown

Communication Protocols

21J IEC 61850

21P DNP 3.0 Comunnications RS232/RS485/Ethernet

21Q Modbus Comunnications RS232/RS485/Ethernet

21S Modbus RTU - Serial Data Port

21X SNMP

A75D/A75DE Charger Chart

	Model Number	DC Amps	Single Phase AC Input Current Draw Amps @ 100% Load (Recommended Feeder AC Supply Breaker)						Case Size	Shipping Weight* (Approximate)	
			(ABD)120/240/208	(A)120	(D)208	(B)240	(C)480	(ZD)600		lbs	kgs
24 Volt Systems	A75D(E)-6-24V	6	3 / 2 / 2 (5/5/5)	---	---	---	---	---	4B75	82	37
	A75D(E)-12-24V	12	6 / 3 / 3 (10/5/5)	---	---	---	---	---	4B75	92	42
	A75D(E)-16-24V	16	8 / 4 / 5 (15/10/10)	---	---	---	---	---	4B75	98	45
	A75D(E)-20-24V	20	10 / 5 / 6 (15/10/10)	---	---	---	---	---	4B75	100	46
	A75D(E)-25-24V	25	12 / 6 / 7 (20/10/10)	---	---	---	---	---	4B75	104	48
	A75D(E)-30-24V	30	---	15 (25)	8 (15)	7 (15)	4 (10)	---	475	130	59
	A75D(E)-35-24V	35	---	17 (25)	10 (15)	9 (15)	4 (10)	---	475	150	69
	A75D(E)-40-24V	40	---	20 (30)	11 (20)	10 (15)	5 (10)	4 (10)	475	160	73
	A75D(E)-50-24V	50	---	24 (35)	14 (20)	12 (20)	6 (10)	5 (10)	475	185	84
	A75D(E)-60-24V	60	---	29 (40)	17 (25)	15 (20)	7 (10)	6 (10)	475	208	95
	A75D(E)-75-24V	75	---	37 (50)	21 (30)	18 (30)	9 (15)	7 (10)	975	240	109
	A75D(E)-100-24V	100	---	49 (70)	28 (40)	24 (35)	12 (20)	10 (15)	975	275	125
48 Volt Systems	A75D(E)-6-48V	6	6 / 3 / 3 (10/5/5)	---	---	---	---	---	4B75	84	38
	A75D(E)-12-48V	12	12 / 6 / 7 (20/10/10)	---	---	---	---	---	4B75	96	44
	A75D(E)-16-48V	16	16 / 8 / 9 (25/15/15)	---	---	---	---	---	475	137	62
	A75D(E)-20-48V	20	20 / 10 / 11 (30/15/20)	---	---	---	5 (10)	---	475	158	72
	A75D(E)-25-48V	25	24 / 12 / 14 (35/20/25)	---	---	---	6 (10)	5 (10)	475	170	73
	A75D(E)-30-48V	30	---	29 (40)	17 (25)	15 (20)	7 (10)	6 (10)	475	190	86
	A75D(E)-35-48V	35	---	34 (50)	20 (30)	17 (25)	9 (15)	7 (10)	475	220	100
	A75D(E)-40-48V	40	---	39 (60)	23 (35)	20 (30)	10 (15)	8 (15)	475	240	109
	A75D(E)-50-48V	50	---	49 (70)	28 (40)	24 (35)	12 (20)	10 (15)	475	260	118
	A75D(E)-60-48V	60	---	59 (90)	34 (50)	29 (40)	15 (20)	12 (20)	975	300	137
	A75D(E)-75-48V	75	---	73 (100)	42 (60)	37 (50)	18 (25)	15 (20)	975	350	159
	A75D(E)-100-48V	100	---	98 (125)	56 (90)	49 (70)	24 (35)	20 (30)	975	448	204
130 Volt Systems	A75D(E)-6-130V	6	15 / 7 / 8 (25/10/15)	---	---	---	4 (10)	3 (5)	475	178	81
	A75D(E)-12-130V	12	29 / 15 / 17 (40/25/25)	---	---	---	7 (10)	6 (10)	475	185	84
	A75D(E)-16-130V	16	39 / 20 / 23 (60/30/35)	---	---	---	10 (15)	8 (15)	475	212	96
	A75D(E)-20-130V	20	49 / 24 / 28 (70/35/40)	---	---	---	12 (20)	10 (15)	475	235	107
	A75D(E)-25-130V	25	61 / 31 / 35 (90/50/50)	---	---	---	15 (20)	12 (20)	475	255	116
	A75D(E)-30-130V	30	---	73 (100)	42 (60)	37 (50)	18 (25)	15 (20)	475	300	137
	A75D(E)-35-130V	35	---	85 (125)	49 (70)	43 (60)	21 (30)	17 (25)	975	375	171
	A75D(E)-40-130V	40	---	98 (150)	56 (90)	49 (70)	24 (35)	20 (30)	975	422	192
	A75D(E)-50-130V	50	---	---	70 (100)	61 (90)	31 (50)	24 (35)	975	480	218
	A75D(E)-75-130V	75	---	---	106 (150)	92 (125)	46 (70)	37 (50)	72	735	334

	Model Number	DC Amps	Three Phase AC Input Current Draw Amps @ 100% Load (Recommended Feeder AC Supply Breaker)				Case Size	Shipping Weight* (Approximate)	
			(D) 208	(B) 240	(C) 480	(ZD) 600		lbs	kgs
24 Volt Systems	A75D(E)-75-24V	75	11 (15)	9 (15)	5 (10)	4 (5)	975	400	181
	A75D(E)-100-24V	100	14 (20)	12 (20)	6 (10)	5 (10)	975	475	215
	A75D(E)-125-24V	125	18 (25)	16 (25)	8 (15)	6 (10)	72	530	240
	A75D(E)-150-24V	150	22 (30)	19 (30)	9 (15)	7 (15)	72	600	272
	A75D(E)-200-24V	200	29 (40)	25 (35)	12 (20)	10 (15)	72	675	306
	A75D(E)-250-24V	250	36 (50)	31 (50)	16 (25)	12 (20)	46	800	363
	A75D(E)-300-24V	300	43 (60)	37 (60)	19 (30)	15 (25)	46	875	398
	A75D(E)-400-24V	400	58 (80)	50 (70)	25 (35)	20 (30)	47	1050	477
48 Volt Systems	A75D(E)-50-48V	50	14 (20)	12 (20)	6 (10)	5 (10)	975	400	181
	A75D(E)-75-48V	75	22 (30)	19 (30)	9 (15)	7 (15)	975	575	261
	A75D(E)-100-48V	100	29 (40)	25 (35)	12 (20)	10 (15)	975	600	272
	A75D(E)-125-48V	125	36 (50)	31 (50)	16 (25)	12 (20)	72	680	308
	A75D(E)-150-48V	150	43 (60)	37 (60)	19 (30)	15 (25)	72	700	318
	A75D(E)-200-48V	200	58 (80)	50 (70)	25 (35)	20 (30)	46	755	342
	A75D(E)-250-48V	250	72 (100)	62 (90)	31 (50)	25 (35)	46	800	363
	A75D(E)-300-48V	300	86 (125)	75 (100)	37 (60)	30 (50)	47	900	408
	A75D(E)-400-48V	400	115 (175)	100 (150)	50 (70)	40 (60)	47	1200	544
130 Volt Systems	A75D(E)-25-130V	25	18 (30)	16 (25)	8 (15)	6 (10)	975	305	138
	A75D(E)-30-130V	30	22 (30)	19 (30)	9 (15)	7 (15)	975	315	143
	A75D(E)-35-130V	35	25 (35)	22 (30)	11 (15)	9 (15)	975	330	150
	A75D(E)-40-130V	40	29 (40)	25 (35)	12 (20)	10 (15)	975	330	150
	A75D(E)-50-130V	50	36 (50)	31 (50)	16 (25)	12 (20)	975	475	216
	A75D(E)-75-130V	75	54 (80)	47 (70)	23 (35)	19 (30)	72	660	299
	A75D(E)-100-130V	100	72 (90)	62 (90)	31 (50)	25 (35)	72	800	363
	A75D(E)-125-130V	125	90 (125)	78 (125)	39 (60)	31 (50)	46	850	385
	A75D(E)-150-130V	150	108 (150)	94 (150)	47 (70)	37 (60)	46	900	408
	A75D(E)-200-130V	200	144 (200)	125 (175)	62 (90)	50 (70)	47	1800	816
	A75D(E)-250-130V	250	180 (250)	156 (225)	78 (125)	62 (90)	47	2000	907
	A75D(E)-300-130V	300	216 (300)	187 (300)	94 (150)	75 (100)	47	2200	998
	A75D(E)-400-130V	400	288 (400)	250 (350)	125 (175)	100 (150)	57	2500	1134
	A75D(E)-500-130V	500	360 (500)	312 (450)	156 (225)	125 (175)	57	2750	1247

*Note: Case size subject to change without notice / *Consult Factory for optional export crating weight*
( ) Recommended Input Feeder Breaker

Case Specifications

Case No.	Overall Dimensions						Cable Entry		Standard Mounting	Optional Mounting Kits	
	Width		Depth		Height						
	in	mm	in	mm	in	mm	AC Input	DC Input		Rack	Floor
4B75	19	483	15.1	384	12.3	310.39	RIGHT TOP / BOTTOM	LEFT TOP / BOTTOM	WALL	19" / 23"	✓
475	19	483	15.1	384	24	609.6	RIGHT TOP / BOTTOM	LEFT TOP / BOTTOM	WALL	19" / 23"	✓
975	20.8	585	15.1	384	37.9	962.66	RIGHT TOP / BOTTOM	LEFT TOP / BOTTOM	FLOOR	23"	STD
72	27	686	23.5	597	44.5	1130.3	BOTTOM RIGHT	BOTTOM LEFT	FLOOR		
46	30	762	30	762	72	1828.8	TOP / BOTTOM	TOP / BOTTOM	FLOOR		
47	38	986	39.4	1001	70	1778	TOP / BOTTOM	TOP / BOTTOM	FLOOR		
57	60	1524	36	915	80	2032	TOP / BOTTOM	TOP / BOTTOM	FLOOR		

Model Number Nomenclature

A75D (E) - 25 - 130V - ( ) 1 - ( ) - ( )

- Model Number
- Filtered / Battery Eliminator
- DC Amps
- DC Volts
- Factory Assigned Accessory Code
- Battery Cell Type Code
- AC Phase Code
- AC Voltage Code

AC Voltage Codes

A - 120
B - 240
C - 480
D - 208
ZD - 600
ABD - 120/240/208

AC Phase Codes

1 - Single Phase
3 - Three Phase

Battery Cell Type Code

11L 12L 13L 22L 23L 24L 25L 26L 53L 54L 55L 56L
57L 58L 59L 60L 61L 62L
17N 18N 19N 20N 33N 34N 35N 36N 37N 38N 39N
83N 84N 85N 86N 87N 88N 89N 90N 91N 92N 93N

L = Lead Acid
N = Nickel Cadmium
LR = VRLA (A75DE Models Only)

Battery Charger Sizing Guidelines

- Required Battery Backup Time (Hours)
- DC Output Voltage
- Ampere Hour Capacity of Battery
- Allowable Recharge Time From Full Discharge (Hours), Where Applicable
- Continuous and Intermittent DC Loads and Duration (Amps)

Ordering Information

When ordering, please specify:

- La Marche Model Number
- DC Amps
- DC Volts
- Special Frequency, When Required
- AC Voltage Code
- AC Phase Code
- Battery Cell Type Code
- Optional Accessories (Option Code)