Lord & Company, Inc.
Instrumentation & Control Systems

377 Carowinds Boulevard, Suite 203; Fort Mill, SC 29708
Tel: (803) 802- 0060 Fax: (803) 802- 0070

Other Offices
Baltimore, Maryland
Hampton, Virginia
Manassas, Virginia

Instrumentation & Controls PLC Control Panels Wiring Diagrams Operation and Maintenance Manual

Volume III of III

For

Waste Water Treatment Plant Improvement Liquid Phase Treatment Project

Oak Ridge, TN

Engineer.....:	*Lamar Dunn & Associates*
Contractor.....:	*Southern Constructors*
Supplier.....:	*Lord & Company, Inc.*
L&C Project #:	*SE-1728*
Date.....:	*10/30/00*

Corporate Office: 8811 Sudley Road, Manassas, VA 20110

Lord & Company, Inc.
Instrumentation & Control Systems

377 Carowinds Boulevard, Suite 203; Fort Mill, SC 29708
Tel: (803) 802- 0060 Fax: (803) 802- 0070

Other Offices
Baltimore, Maryland
Hampton, Virginia
Manassas, Virginia

Introducing our Operation and Maintenance Manual

This Operation and Maintenance Manual was prepared with care and should be easy to follow, but if you have any questions concerning this O & M package or the project please do not hesitate to contact the Project Manager below. Our Southeast Division will handle this project. We look forward to working with you on this project, and it is our goal to continue this business relationship.

We believe that how we do business with our clients is as important as what we do for our clients. By maintaining a firm focus on quality and client satisfaction, Lord & Company has grown to be a leader of wide-ranging turnkey and customized instrumentation systems.

Project Manager:	*Tom Carico*
Project #.....:	*SE-1728*
Address.....:	*377 Carowinds Blvd., Suite 203*
	Fort Mill, SC 29708
Phone.....:	*(803) 802-0060 x104*
Fax.....:	*(803) 802-0070*

Corporate Office: 8811 Sudley Road, Manassas, VA 20110

Lord & Company, Inc.
Instrumentation & Control Systems

377 Carowinds Boulevard, Suite 203; Fort Mill, SC 29708
Tel: (803) 802- 0060 Fax: (803) 802- 0070

Other Offices
Baltimore, Maryland
Hampton, Virginia
Manassas, Virginia

Index:

Tab 1: ***Operations Building PLC Control Panel***
Wiring Diagrams

Tab 2: ***Blower Building PLC Control Panel***
Wiring Diagrams

Tab 3: ***Influent Screen Building PLC Control Panel***
Wiring Diagrams

Tab 4: ***Turtle Park Pump Station PLC Control Panel***
Wiring Diagrams

Corporate Office: 8811 Sudley Road, Manassas, VA 20110

Lord & Company, Inc.
Instrumentation & Control Systems

377 Carowinds Boulevard, Suite 203; Fort Mill, SC 29708
Tel: (803) 802- 0060 Fax: (803) 802- 0070

Other Offices
Baltimore, Maryland
Hampton, Virginia
Manassas, Virginia

OPERATIONS BUILDING

PLC CONTROL PANEL

CHASSIS : A1, A2, OP, OS

Waste Water Treatment Plant Improvements
Liquid Phase Treatment Project

Oak Ridge, TN

AS - BUILT WIRING DIAGRAMS

Engineer.....:	*Lamar Dunn & Associates*
Contractor.....:	*Southern Constructors*
Supplier.....:	*Lord & Company, Inc.*
L&C Project #:	*SE-1728*
Date.....:	*10/24/00*

Corporate Office: 8811 Sudley Road, Manassas, VA 20110

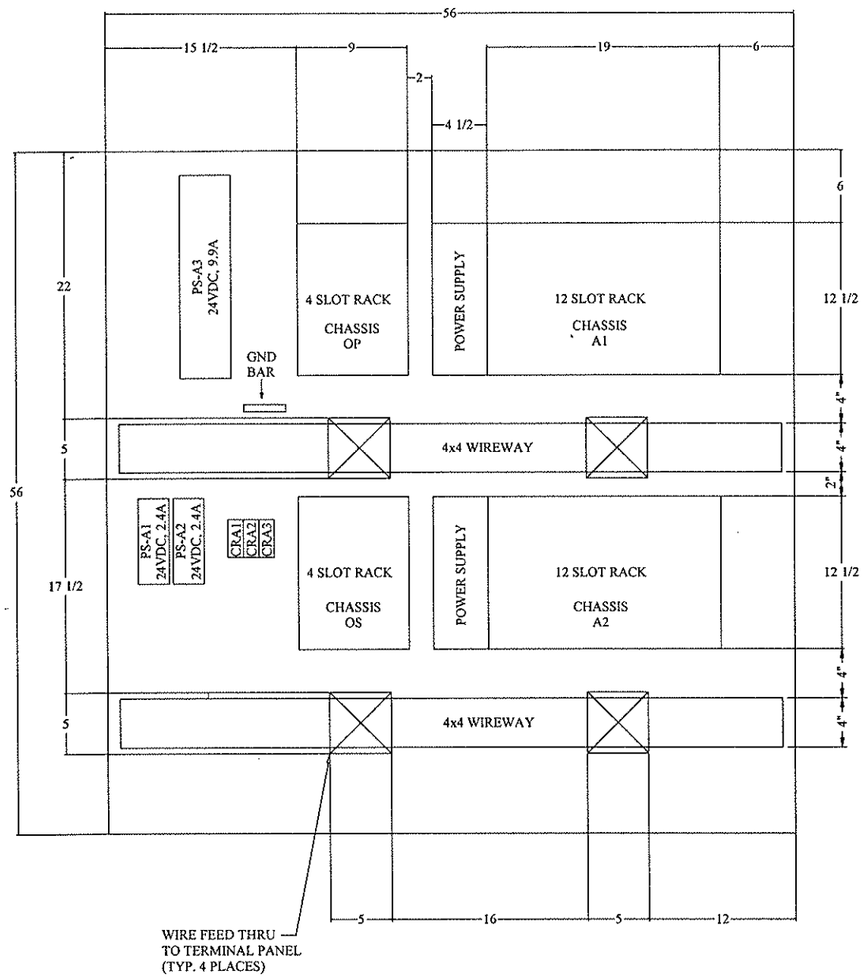

PLC PANEL LAYOUT

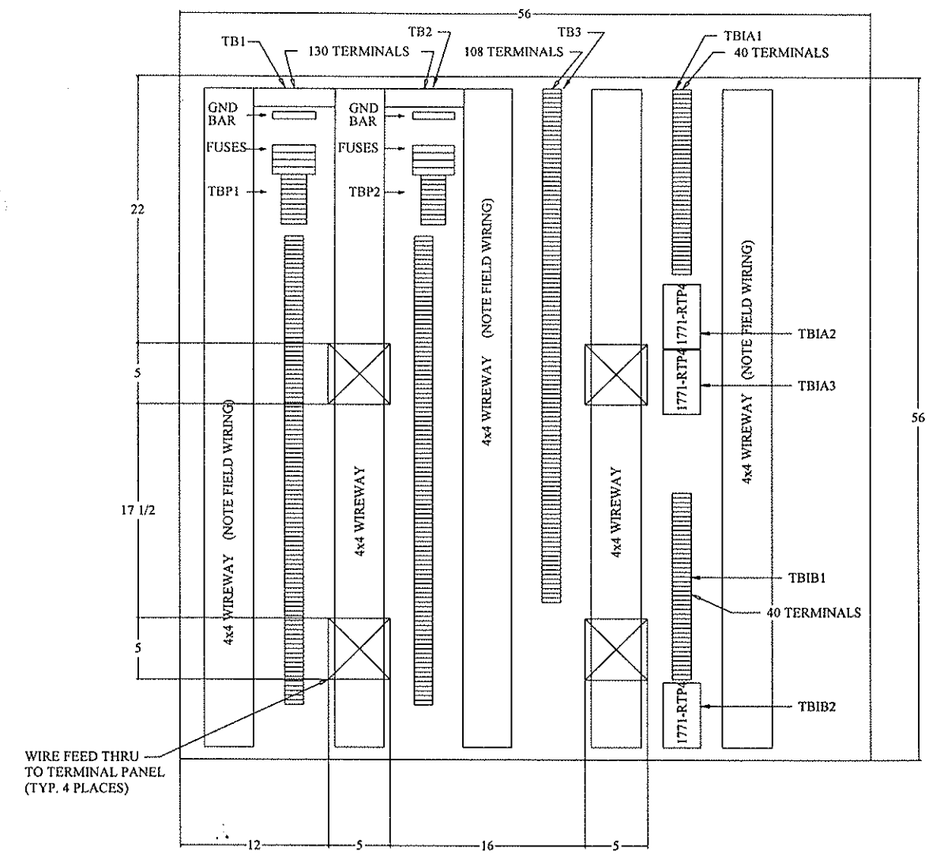

TERMINAL PANEL LAYOUT

NO	DATE	DESCRIPTION	BY	CKD.
1	02/11/00	L & C SUBMITTAL CHANGES, ADDED PS-A1,A2,A3 & RELAY	FDM	

REVISIONS

LD&A
Lamar Dunn & Associates Inc.
3305 Maloney Road
Knoxville, TN 37920

CITY OF OAK RIDGE
ANDERSON COUNTY, TENNESSEE

OPERATIONS BUILDING
PLC PANEL LAYOUT

DESIGNED BY	CHECKED BY	SCALE:	SHEET IP-1
GSH	JMH	NONE	OF NO. SHEETS
DRAWN BY	DATE	FILE NO.	
EGB	04-98	OR-9408-D	

LAST DATE MODIFIED 10/27/98

PAN1.DWG

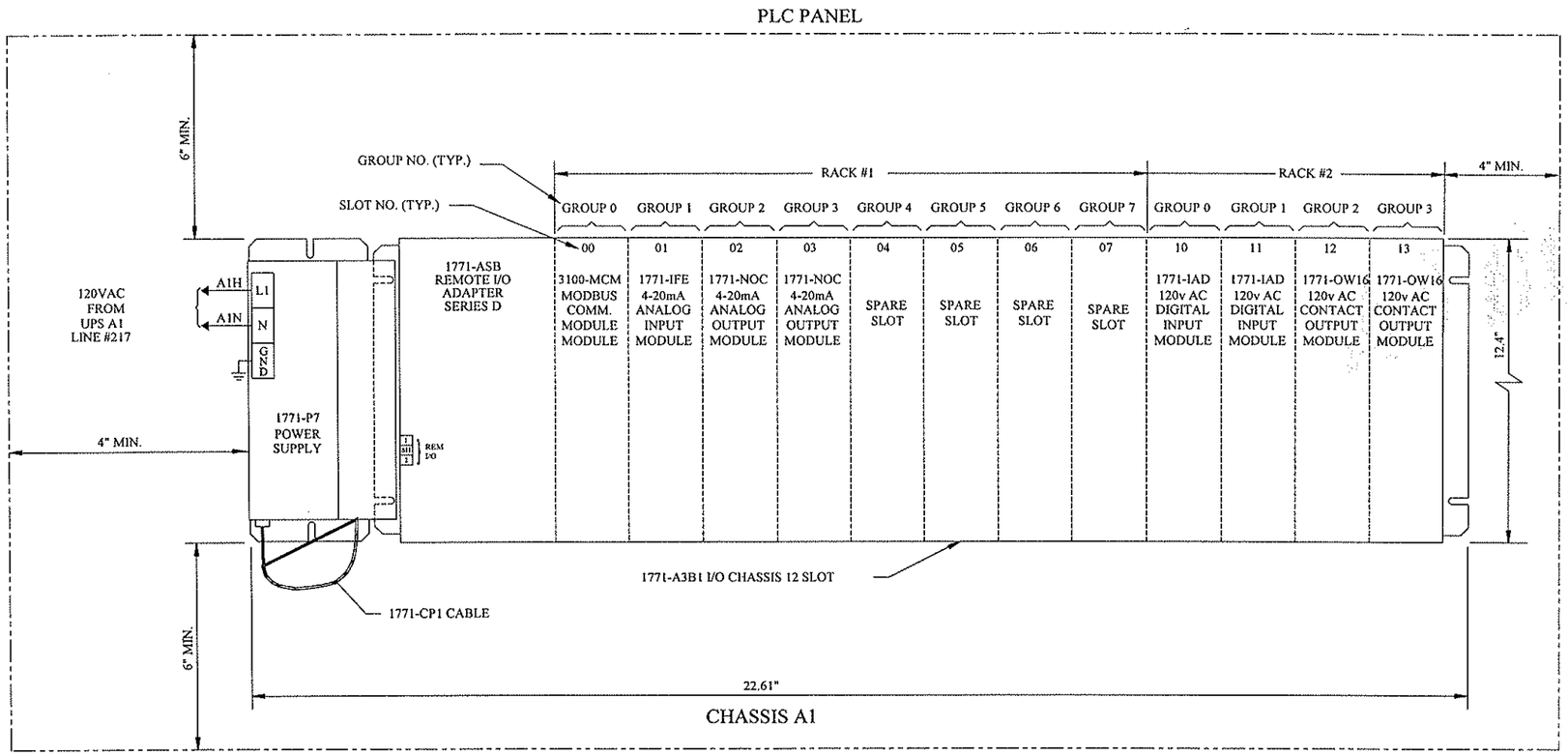

1771-A3B POWER SUPPLY CONFIGURATION PLUG: RIGHT POSITION

1771-A3B BACKPLANE DIP SWITCH SETTINGS:
1-OFF
2-ON
3-OFF
4-OFF
5-ON
6-OFF
7-OFF
8-OFF

1771-ASB DIP SWITCH: DIP SWITCH #1 SETTINGS:
1-ON
2-ON
3-ON
4-ON
5-ON
6-OFF
7-ON
8-ON

1771-ASB DIP SWITCH: DIP SWITCH #2 SETTINGS:
1-ON
2-OFF
3-OFF
4-OFF
5-OFF
6-OFF

1771-ASB PLUG CONNECTION SWITCH SETTINGS:
1-LEFT
2-LEFT
3-LEFT

NOTE:
1. "EACH I/O MODULE IS SLOTTED IN TWO PLACES AT THE REAR EDGE. THESE SLOTS ARE INTENDED TO MATE WITH THE PLASTIC KEYS SUPPLIED WITH THE CHASSIS. POSITION THE KEYS IN THE BACKPLANE CONNECTOR TO CORRESPOND WITH THE SLOTS IN A PARTICULAR MODULE, TO GUARD AGAINST THE INSERTION OF THE WRONG MODULE." (REF. ALLEN-BRADLEY PUBLICATION 1771-2.49)
2. INPUT VOLTAGE RANGE FOR 1771-P7 POWER SUPPLY IS 97-132 VAC.

NO	DATE	DESCRIPTION	BY	CKD

REVISIONS

LD&A
Lamar Dunn & Associates Inc.
3305 Kingston Road
Knoxville, TN 37920

CITY OF OAK RIDGE
ANDERSON COUNTY, TENNESSEE

PLC BLOCK DIAGRAM

DESIGNED BY	CHECKED BY	SCALE:	SHEET IM-5
GSH		NONE	
DRAWN BY	DATE	FILE NO.	OF NO. SHEETS
EGB	09/22/98	OR-9408-D	

LAST DATE MODIFIED 11-02-98

IM5.DWG 1:1

PLC PANEL

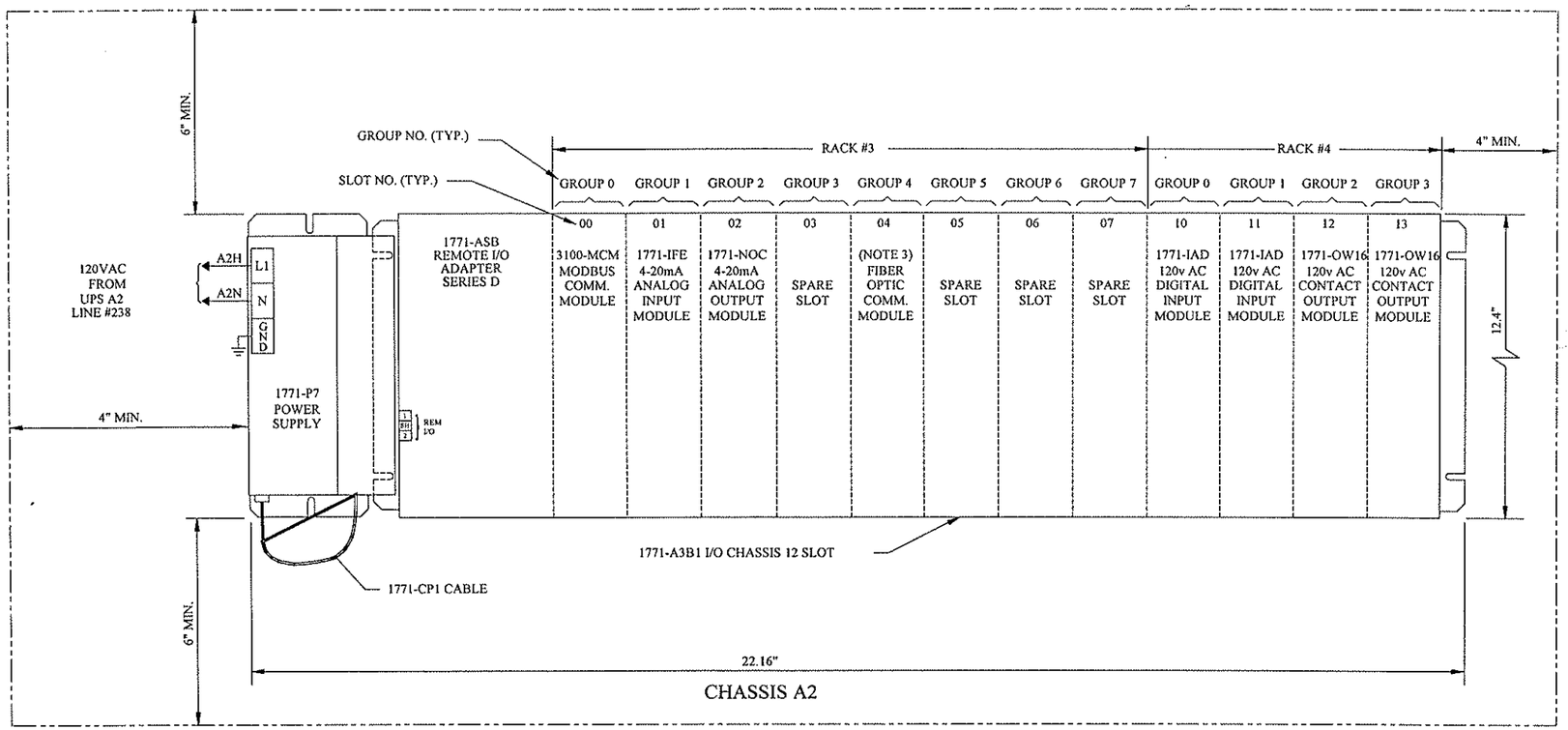

1771-A3B POWER SUPPLY CONFIGURATION PLUG: RIGHT POSITION

1771-A3B BACKPLANE DIP SWITCH SETTINGS:
1-OFF
2-ON
3-OFF
4-OFF
5-ON
6-OFF
7-OFF
8-OFF

1771-ASB DIP SWITCH: DIP SWITCH #1 SETTINGS:
1-ON
2-ON
3-ON
4-ON
5-OFF
6-OFF
7-ON
8-ON

1771-ASB DIP SWITCH: DIP SWITCH #2 SETTINGS:
1-ON
2-OFF
3-OFF
4-OFF
5-OFF
6-OFF

1771-ASB PLUG CONNECTION SWITCH SETTINGS:
1-LEFT
2-LEFT
3-LEFT

NOTE:
1. "EACH I/O MODULE IS SLOTTED IN TWO PLACES AT THE REAR EDGE. THESE SLOTS ARE INTENDED TO MATE WITH THE PLASTIC KEYS SUPPLIED WITH THE CHASSIS. POSITION THE KEYS IN THE BACKPLANE CONNECTOR TO CORRESPOND WITH THE SLOTS IN A PARTICULAR MODULE, TO GUARD AGAINST THE INSERTION OF THE WRONG MODULE." (REF. ALLEN-BRADLEY PUBLICATION 1771-2.49)
2. INPUT VOLTAGE RANGE FOR 1771-P7 POWER SUPPLY IS 97-132 VAC.
3. FIBER OPTIC COMMUNICATION MODULE PHOENIX DIGITAL OCM-DPR-85-D-ST.

NO.	DATE	DESCRIPTION	BY	CKD

REVISIONS

LD&A
Lamar Dunn & Associates Inc.
5305 Midway Road
Knoxville, TN 37920

CITY OF OAK RIDGE
ANDERSON COUNTY, TENNESSEE

PLC BLOCK DIAGRAM

DESIGNED BY	CHECKED BY	SCALE:	SHEET IM-6
GSH		NONE	
DRAWN BY	DATE	FILE NO.	OF NO. SHEETS
EGB	09/22/98	OR-9408-D	

LAST DATE MODIFIED 11/02/98

IM6. DWG 1.1

PLC PANEL

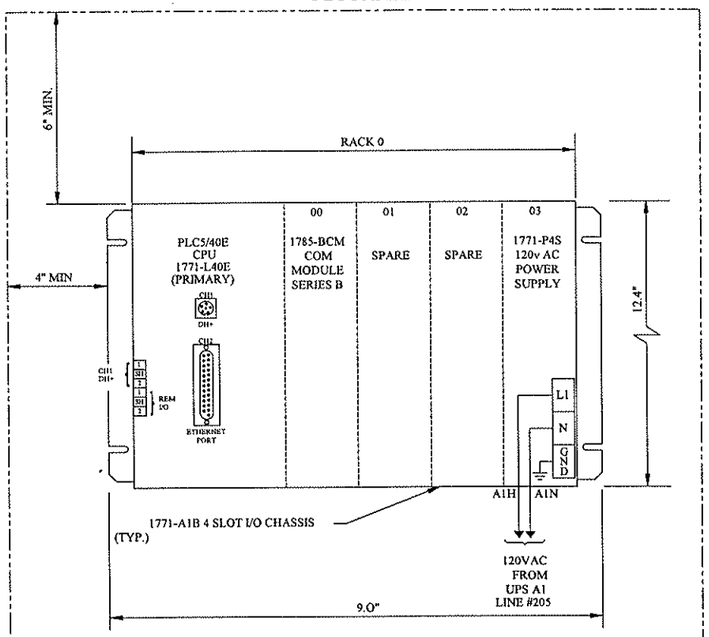

CHASSIS OP

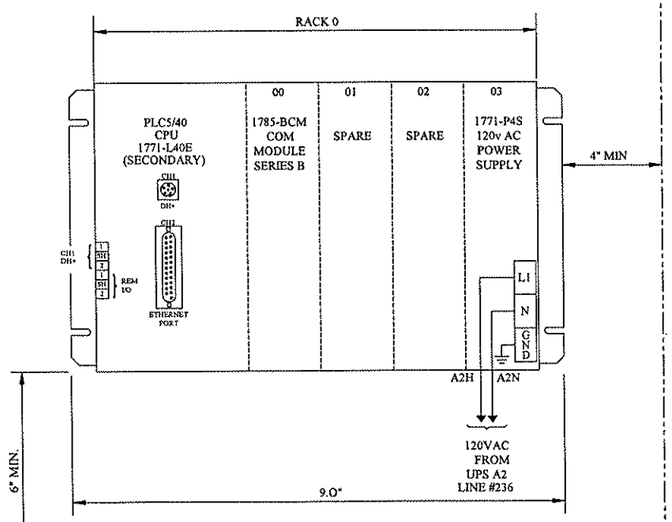

CHASSIS OS

1771-A1B POWER SUPPLY CONFIGURATION PLUG:	LEFT POSITION
1771-A1B BACKPLANE DIP SWITCH SETTINGS:	1-OFF 2-OFF 3-OFF 4-ON 5-OFF 6-ON 7-OFF 8-OFF
PRIMARY & SECONDARY PLC 1785-L40E DIP SWITCH: SIDE OF MODULE DIP SWITCH #1 SETTINGS:	1-ON 2-ON 3-ON 4-OFF 5-ON 6-ON 7-OFF
1785-L40E DIP SWITCH: BOTTOM OF MODULE DIP SWITCH #2 SETTINGS: (RS-232)	1-ON 2-ON 3-ON 4-OFF 5-OFF 6-ON 7-ON 8-OFF 9-ON 10-OFF

PRIMARY & SECONDARY 1785-BCM DIP SWITCH #1 SETTINGS:	1-OFF 2-ON 3-OFF 4-OFF
1785-BCM DIP SWITCH #2 SETTINGS:	1-ON 2-ON 3-ON 4-OFF 5-ON 6-OFF

NOTES:

1. "EACH I/O MODULE IS SLOTTED IN TWO PLACES AT THE REAR EDGE. THESE SLOTS ARE INTENDED TO MATE WITH THE PLASTIC KEYS SUPPLIED WITH THE CHASSIS. POSITION THE KEYS IN THE BACKPLANE CONNECTOR TO CORRESPOND WITH THE SLOTS IN A PARTICULAR MODULE, TO GUARD AGAINST THE INSERTION OF THE WRONG MODULE." (REF. ALLEN-BRADLEY PUBLICATION 1771-2.49)
2. INPUT VOLTAGE RANGE FOR 1771-P4S POWER SUPPLY IS 97-132 VAC.

NO	DATE	DESCRIPTION	BY	CKD

REVISIONS

LD&A
Lamar Dunn & Associates Inc.
3305 Maloney Road
Knoxville, TN 37918

CITY OF OAK RIDGE
ANDERSON COUNTY, TENNESSEE

PLC BLOCK DIAGRAM

DESIGNED BY	CHECKED BY	SCALE	SHEET IM-7
GSH		NONE	
DRAWN BY	DATE	FILE NO	OF NO. SHEETS
EGB	09/22/98	OR-9408-D	

LAST DATE MODIFIED 11/02/98

IM7.DWG 1:1

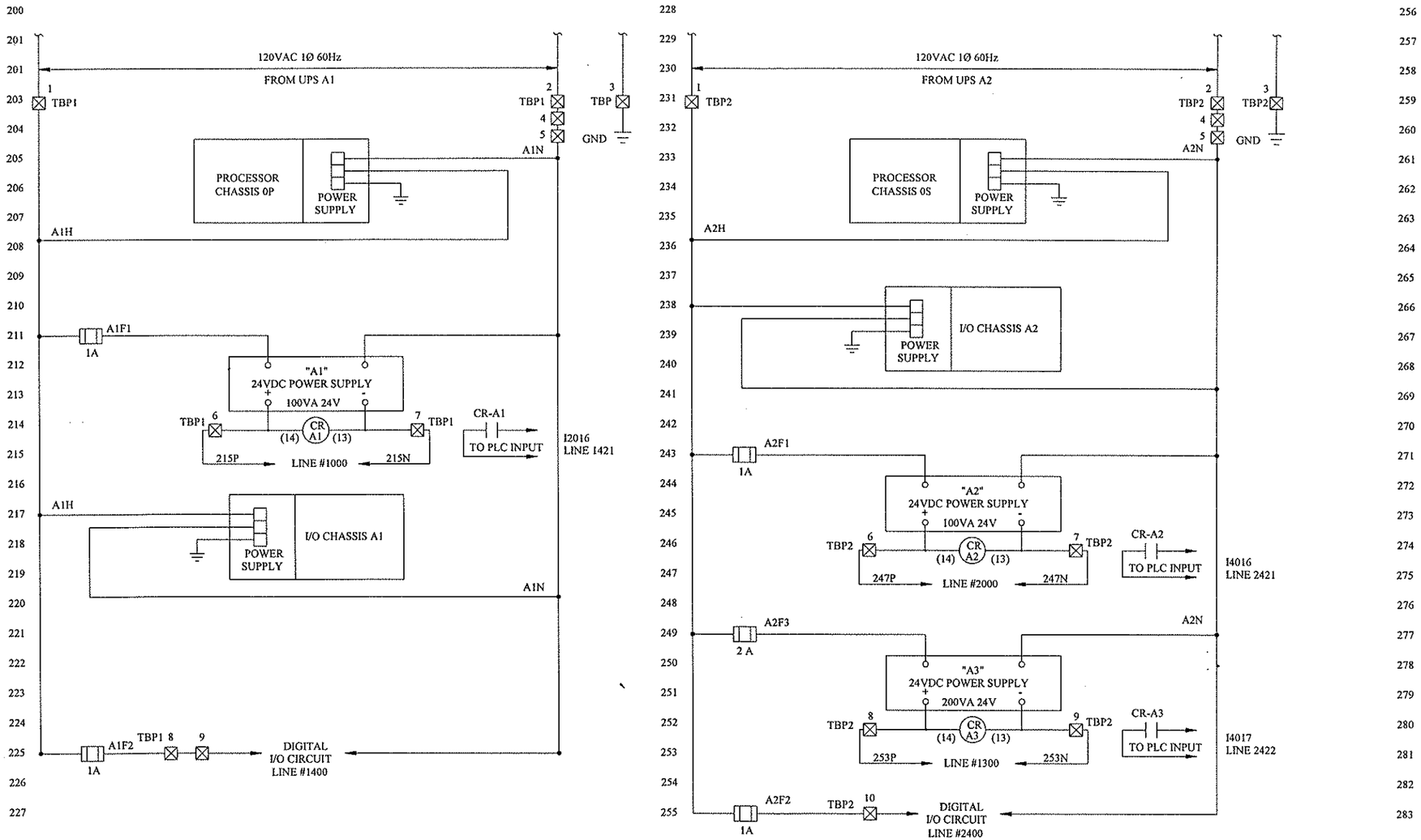

NO	DATE	DESCRIPTION	BY	CKD
		REVISIONS		

LD&A
Larmar Down & Associates Inc.
1309 Kidsway Road
Knoxville, TN 37920

CITY OF OAK RIDGE
ANDERSON COUNTY, TENNESSEE

OPERATIONS BUILDING
PLC CONTROL POWER

DESIGNED BY	CHECKED BY	SCALE:	SHEET IM-2
GSH	JMH	NONE	OF NO. SHEETS
DRAWN BY	DATE	FILE NO.	
EGB	04-98	OR-9408-D	

LAST DATE MODIFIED 10/27/98 PLC2 DWG 1-1

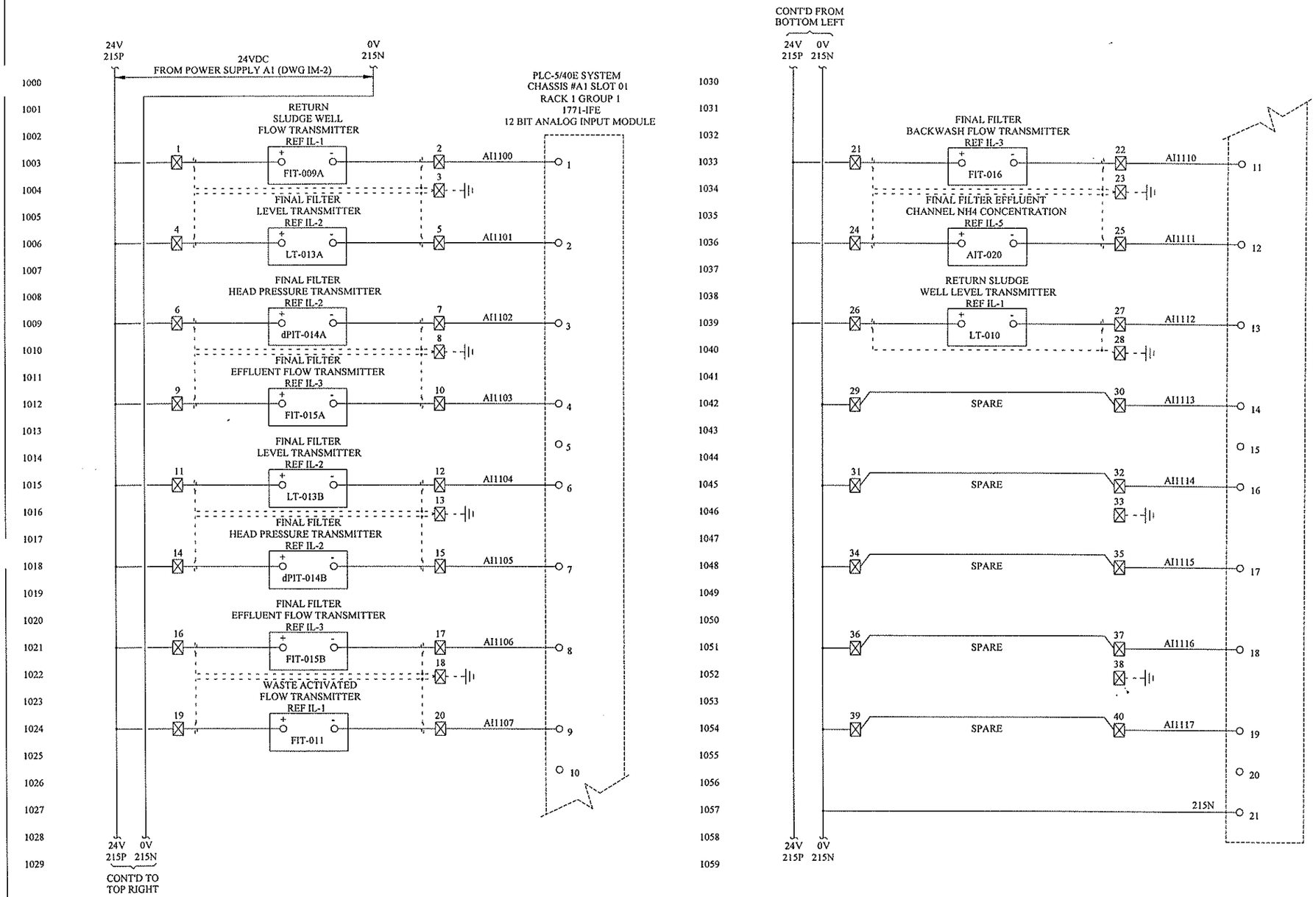

OPERATIONS BUILDING PLC

NOTE: 1. ⊠ DESIGNATES PLC PANEL TERMINAL
2. PLC TERMINATIONS THIS SHEET ARE ON TERMINAL BLOCK TBIA1

NO	DATE	DESCRIPTION	BY	CKD
		REVISIONS		

LD&A
Lamar Dunn & Associates Inc.
3305 Maloney Road
Knoxville, TN 37920

CITY OF OAK RIDGE
ANDERSON COUNTY, TENNESSEE

PLC ANALOG INPUTS
ELEMENTARY DIAGRAM

DESIGNED BY	CHECKED BY	SCALE:	SHEET IM-10
GSH		NONE	
DRAWN BY	DATE	FILE NO.	OF NO. SHEETS
EGB	09/27/98	OR-9408-D	

LAST DATE MODIFIED 12/29/98

IM10.DWG 1:1

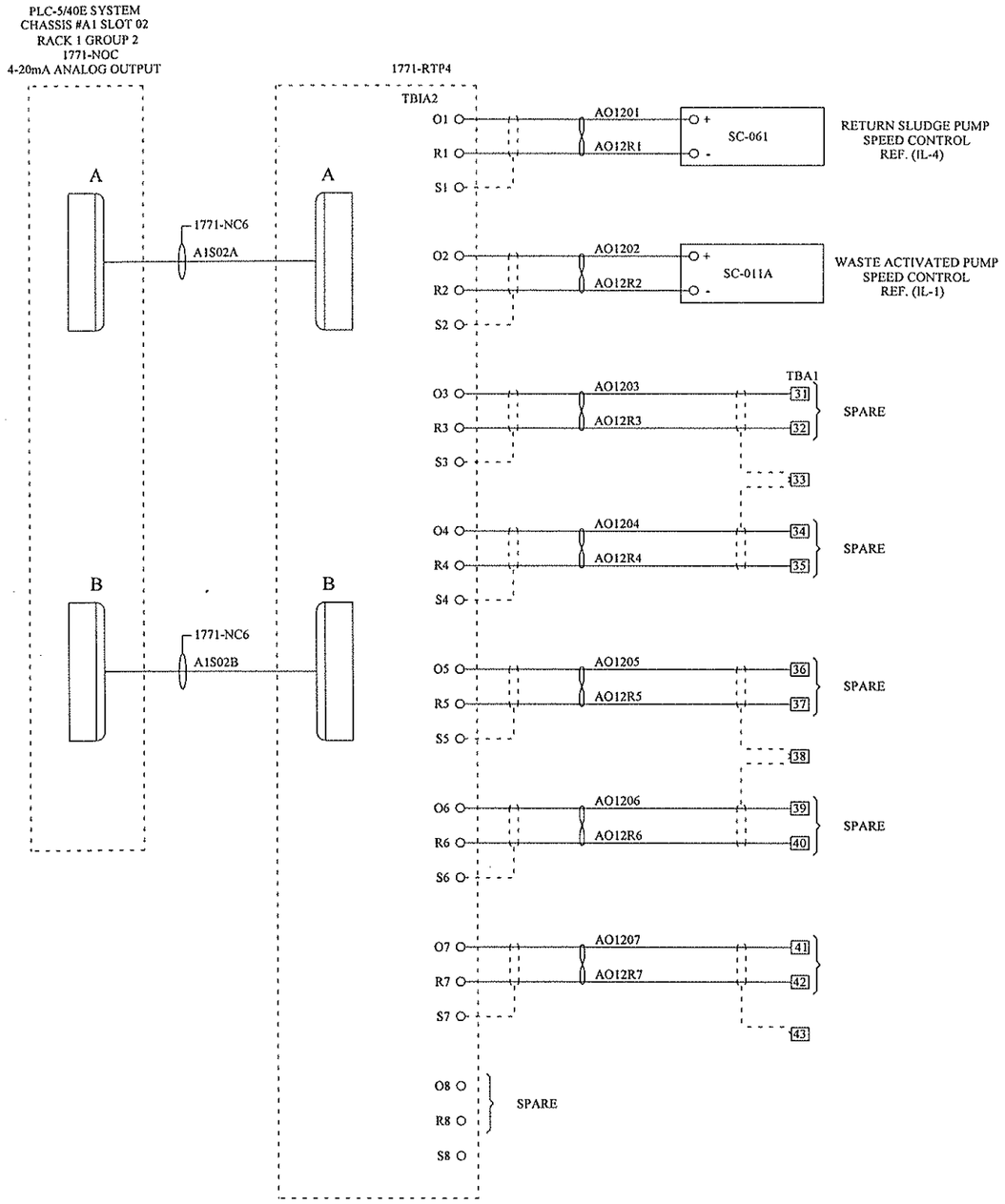

OPERATIONS BUILDING PLC PANEL

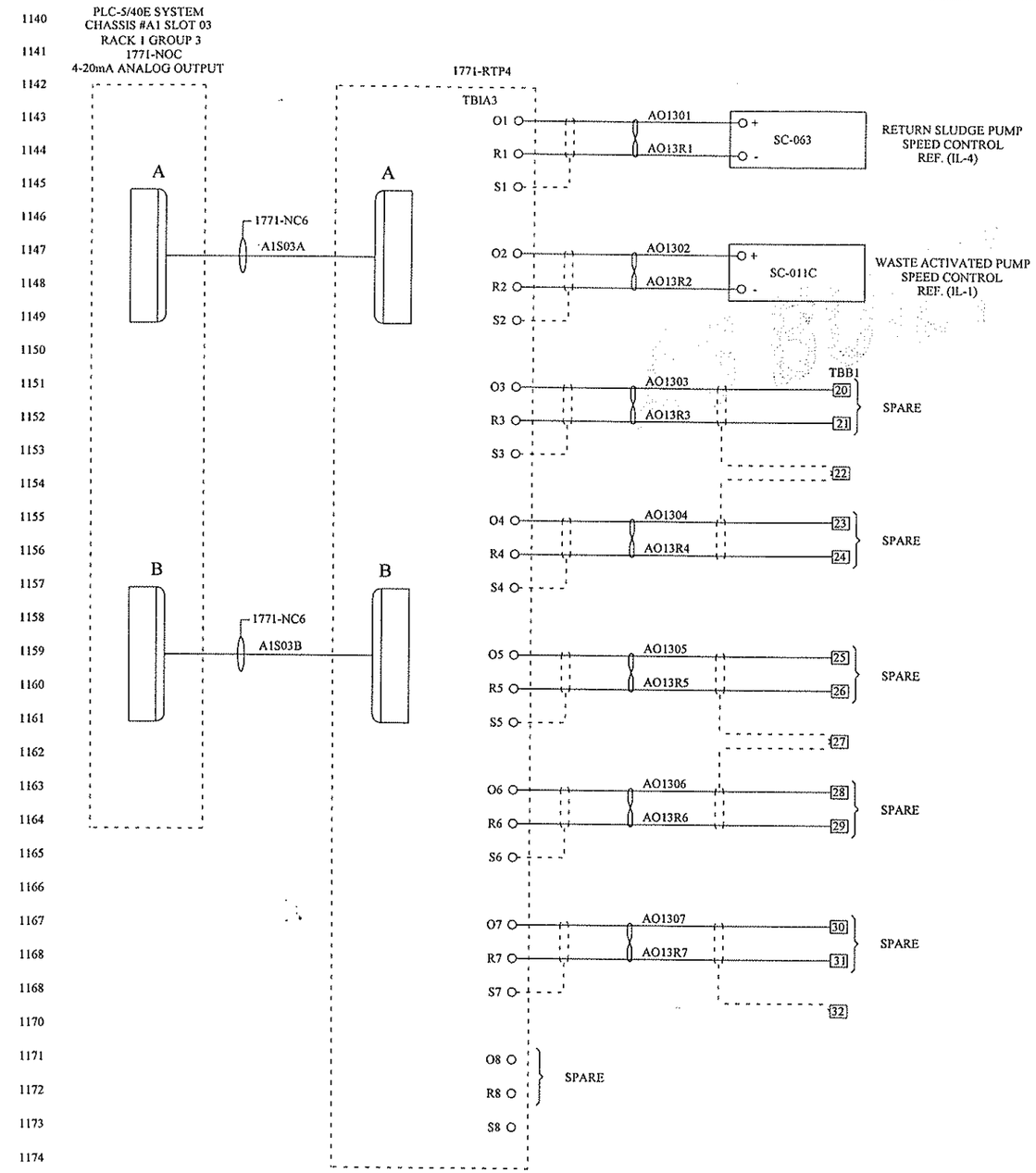

NOTE: 1. XX -DESIGNATES MIMIC PANEL TERMINALS

NO.	DATE	DESCRIPTION	BY	CKD
		REVISIONS		

LD&A
Lamar Dunn & Associates Inc.
3106 Maloney Road
Knoxville, TN 37920

CITY OF OAK RIDGE
ANDERSON COUNTY, TENNESSEE

PLC ANALOG OUTPUTS
ELEMENTARY DIAGRAM

DESIGNED BY	CHECKED BY	SCALE:
GSH		NONE
DRAWN BY	DATE	FILE NO.
EGB	09/29/98	OR-9408-D

SHEET IM-11 OF NO. SHEETS

LAST DATE MODIFIED 12/29/98

IM11.DWG 1:1

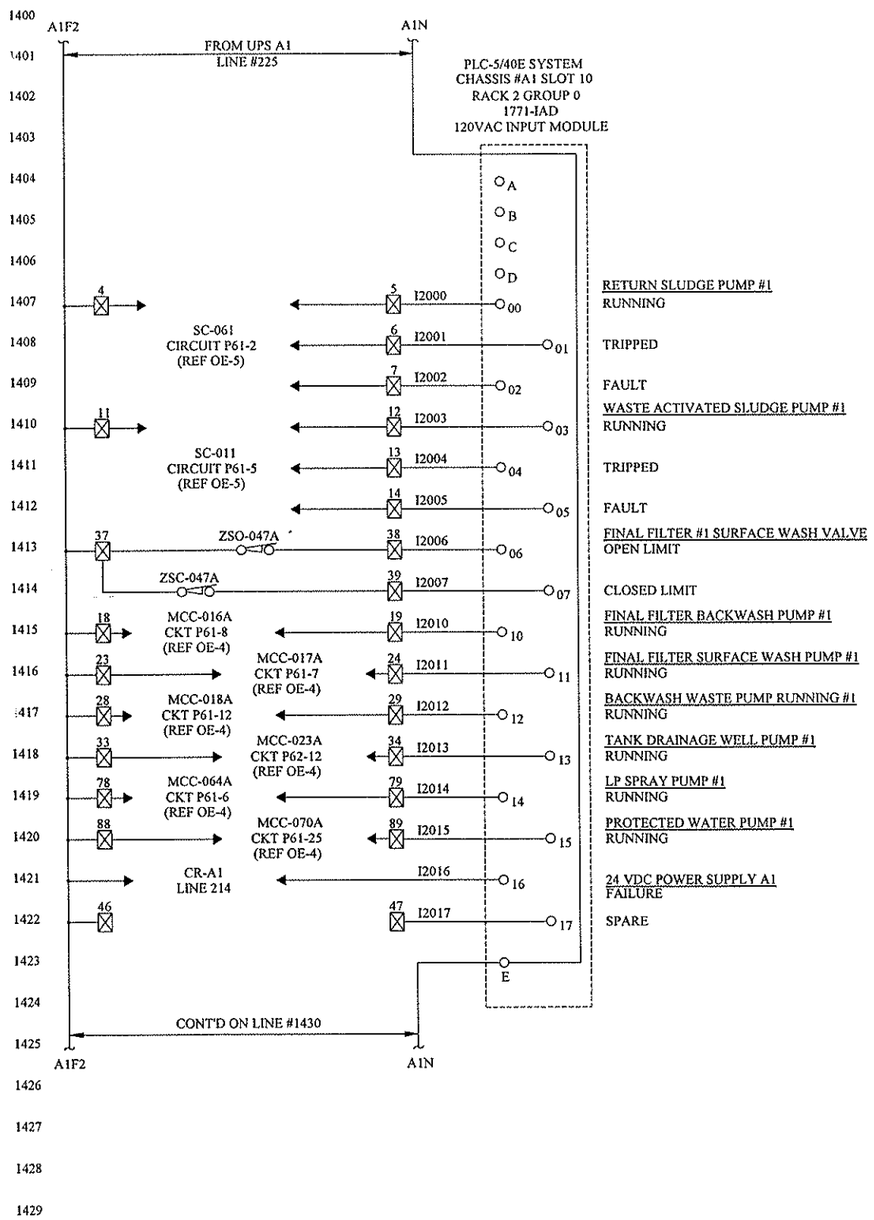

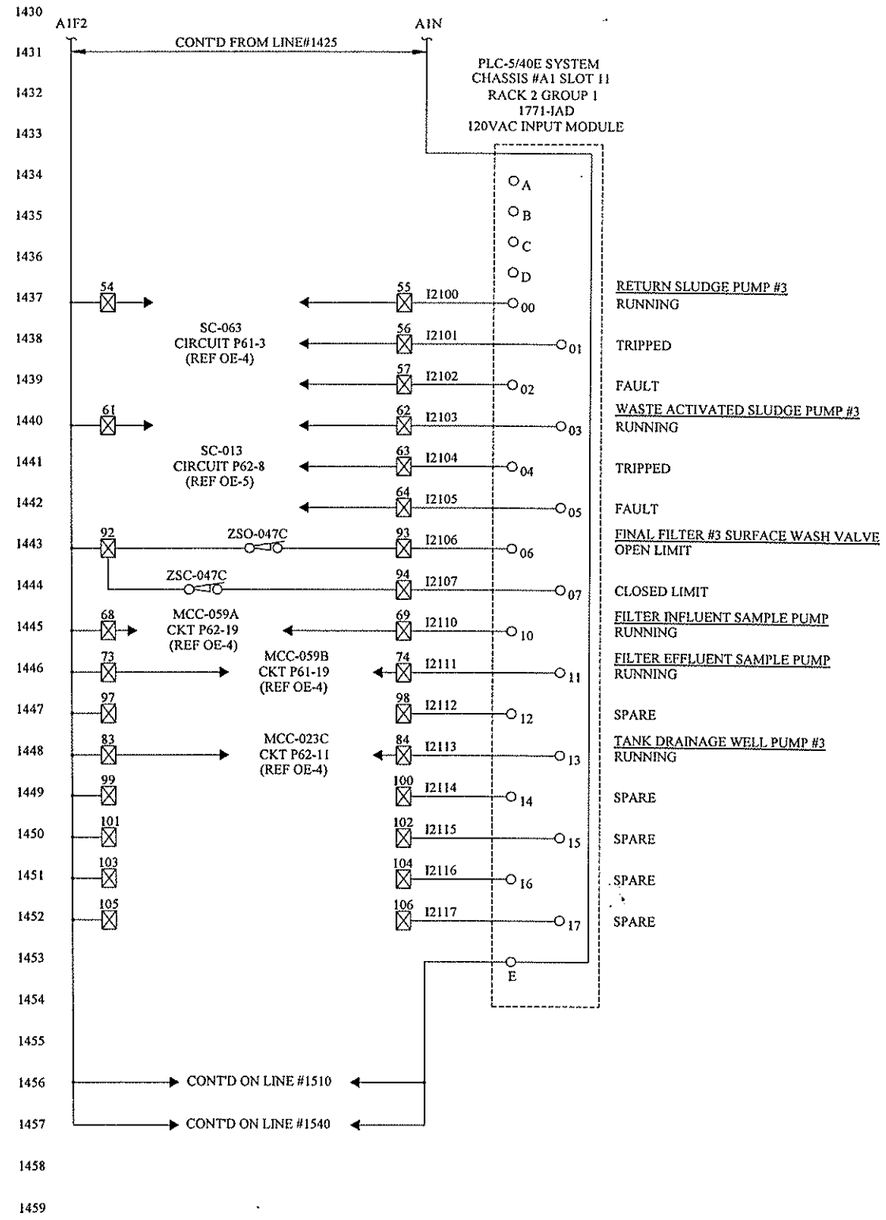

OPERATIONS BUILDING PLC PANEL

NOTE: 1. ☒ DESIGNATES PLC PANEL TERMINAL
2. PLC TERMINATIONS THIS SHEET ARE ON TERMINAL BLOCK TB1

NO	DATE	DESCRIPTION	BY	CKD

REVISIONS

LD&A
Lamar Dunn & Associates Inc.
2305 Mahoney Road
Knoxville, TN 37920

CITY OF OAK RIDGE
ANDERSON COUNTY, TENNESSEE

PLC DIGITAL INPUTS & OUTPUTS
ELEMENTARY DIAGRAM

DESIGNED BY	CHECKED BY	SCALE:	SHEET IM-14
GSH		NONE	
DRAWN BY	DATE	FILE NO.	OF NO. SHEETS
EGB	10/04/98	OR-9408-D	

LAST DATE MODIFIED 11/12/98

IM14.DWG 1:1

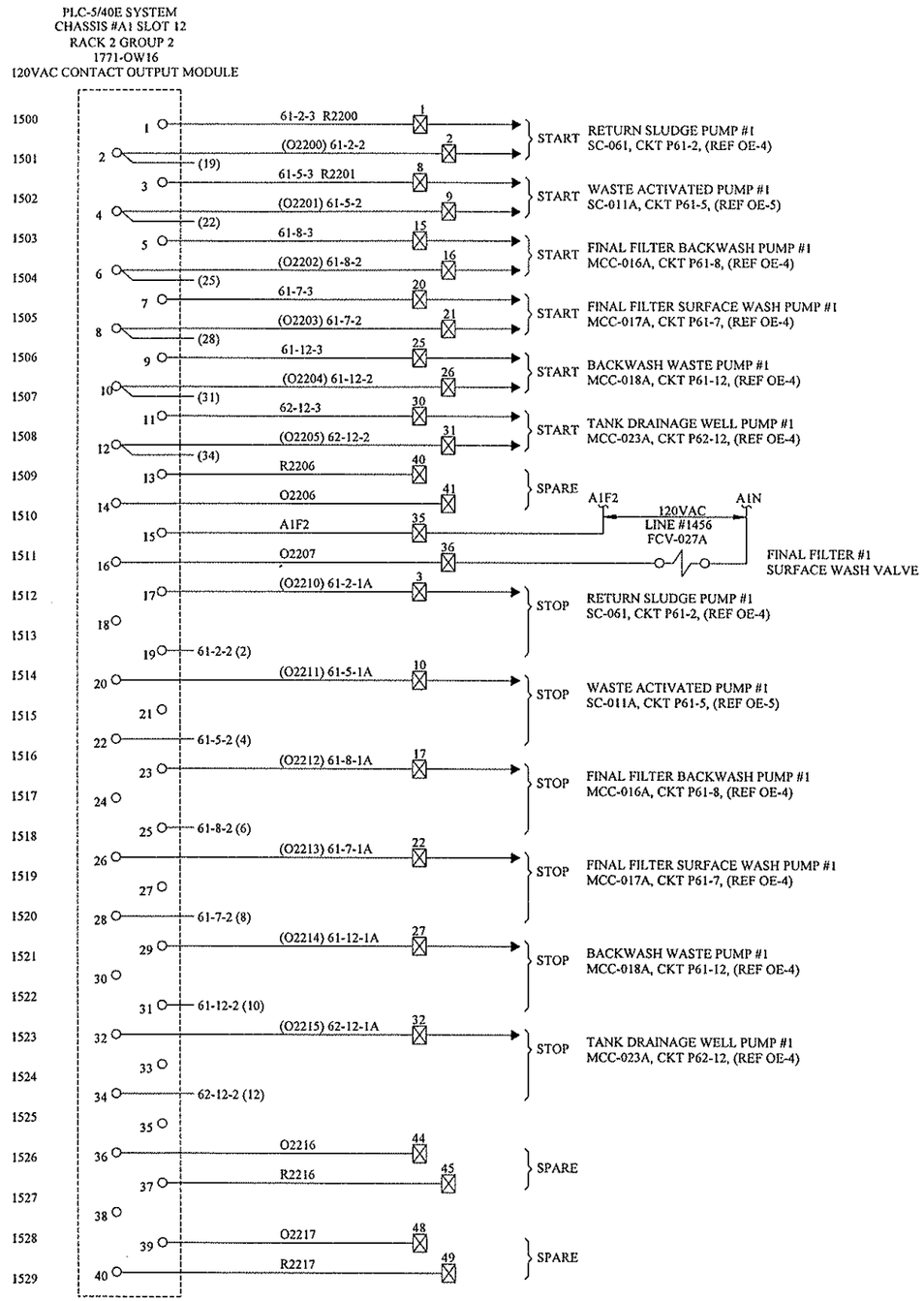

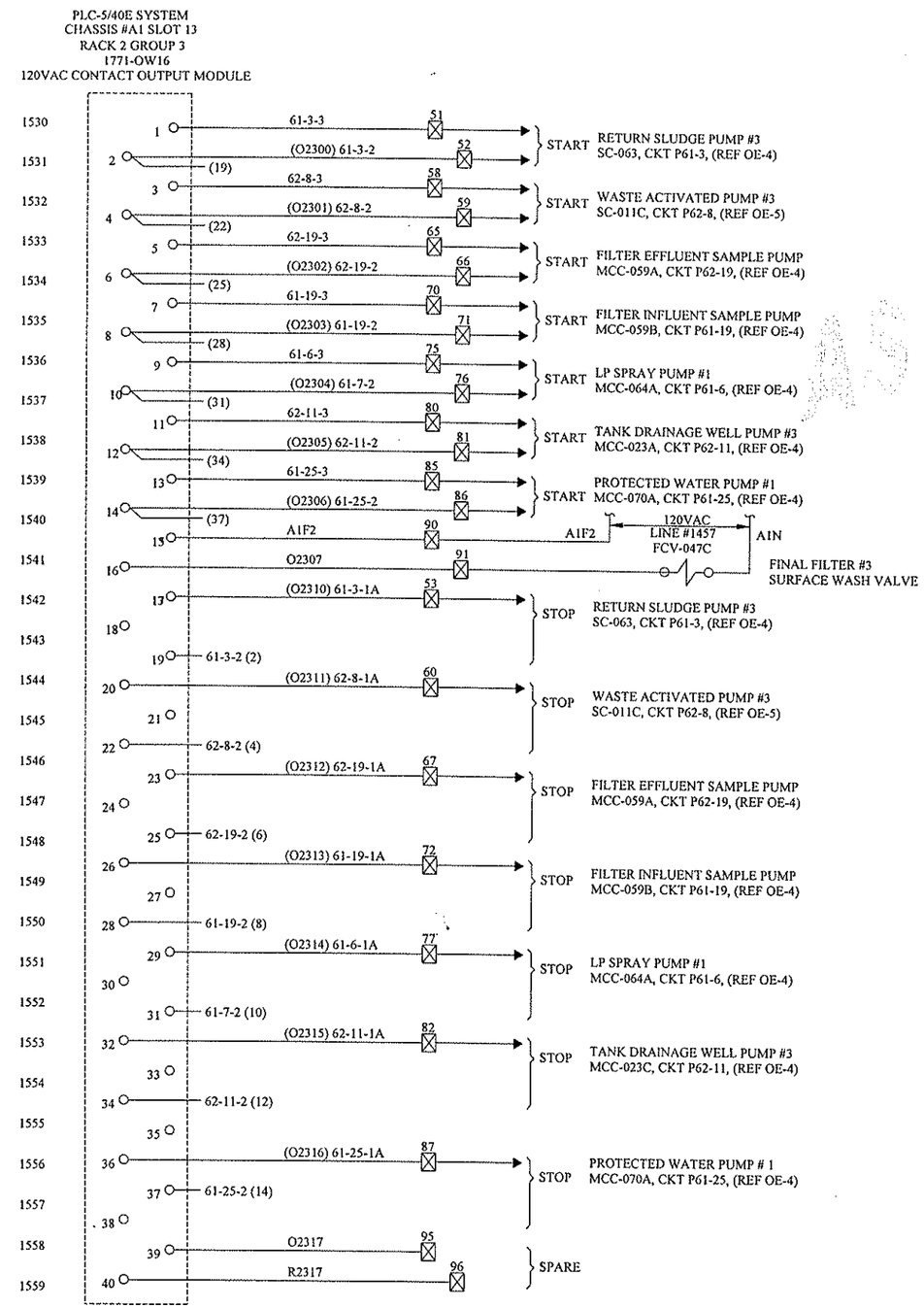

OPERATIONS BUILDING PLC PANEL

NOTE: 1. ⊠ DESIGNATES PLC PANEL TERMINAL
2. PLC TERMINATIONS THIS SHEET ARE ON TERMINAL BLOCK TB1

NO	DATE	DESCRIPTION	BY	CKD

REVISIONS

LD&A
Lamar Dunn & Associates Inc.
1305 Maloney Road
Knoxville, TN 37920

CITY OF OAK RIDGE
ANDERSON COUNTY, TENNESSEE

PLC DIGITAL INPUTS & OUTPUTS
ELEMENTARY DIAGRAM

DESIGNED BY	CHECKED BY	SCALE:	SHEET
GSH		NONE	M-15
DRAWN BY	DATE	FILE NO.	OF NO. SHEETS
EGB	10/05/98	OR-9408-D	

LAST DATE MODIFIED 10/12/98

M15.DWG 1.1

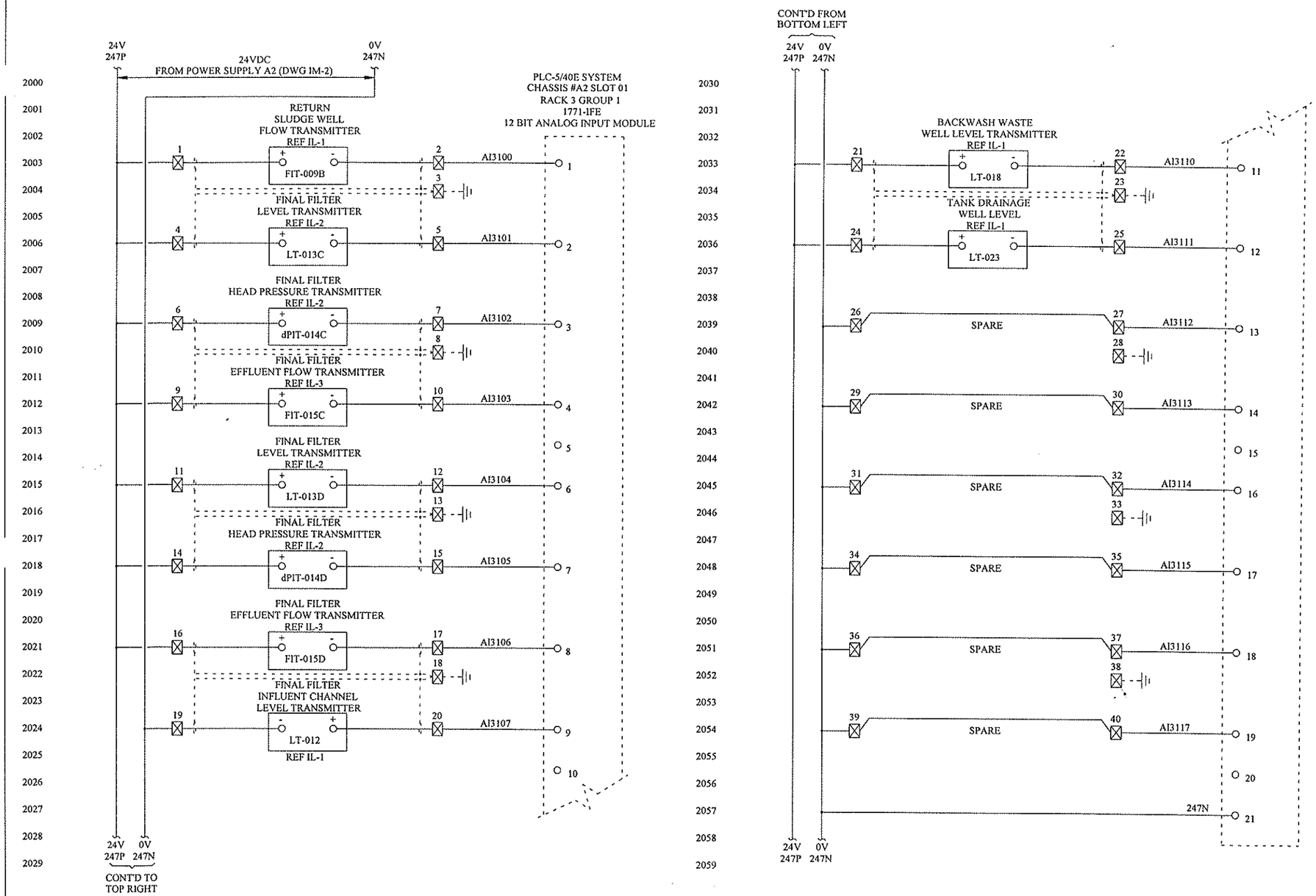

OPERATIONS BUILDING PLC

NOTE: 1. ⊠ DESIGNATES PLC PANEL TERMINAL
2. PLC TERMINATIONS THIS SHEET ARE ON TERMINAL BLOCK TBIB1

NO	DATE	DESCRIPTION	BY	CKD.

REVISIONS

LD&A
Larson Durst & Associates Inc.
3305 Mahoney Road
Knoxville, TN 37920

CITY OF OAK RIDGE
ANDERSON COUNTY, TENNESSEE

PLC ANALOG INPUTS
ELEMENTARY DIAGRAM

DESIGNED BY	CHECKED BY	SCALE:
GSH		NONE
DRAWN BY	DATE	FILE NO.
EGB	10/18/98	OR-9408-D

SHEET IM-20 OF NO. SHEETS

LAST DATE MODIFIED 12/20/98

IM20.DWG 1:1

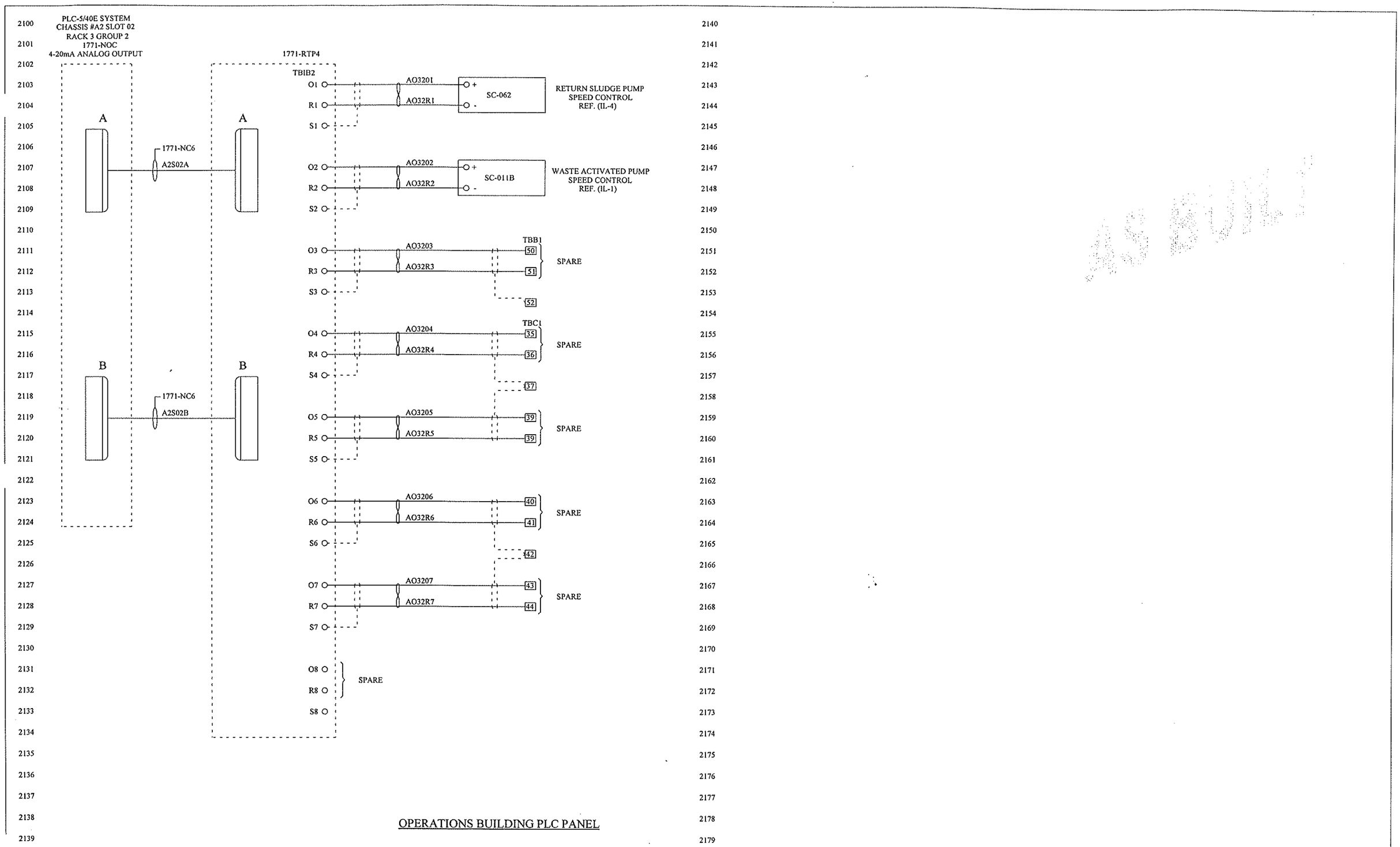

OPERATIONS BUILDING PLC PANEL

AS BUILT

NO	DATE	DESCRIPTION	BY	CKD

REVISIONS

LD&A
Lamar Dunn & Associates Inc.
1305 Maloney Road
Knoxville, TN 37920

CITY OF OAK RIDGE
ANDERSON COUNTY, TENNESSEE

PLC ANALOGS
ELEMENTARY DIAGRAM

DESIGNED BY	CHECKED BY	SCALE:	SHEET
GSH		NONE	M-21
DRAWN BY	DATE	FILE NO.	OF NO. SHEETS
EGB	09/29/98	OR-9408-D	

LAST DATE MODIFIED 11/12/98

IM21.DWG 1:1

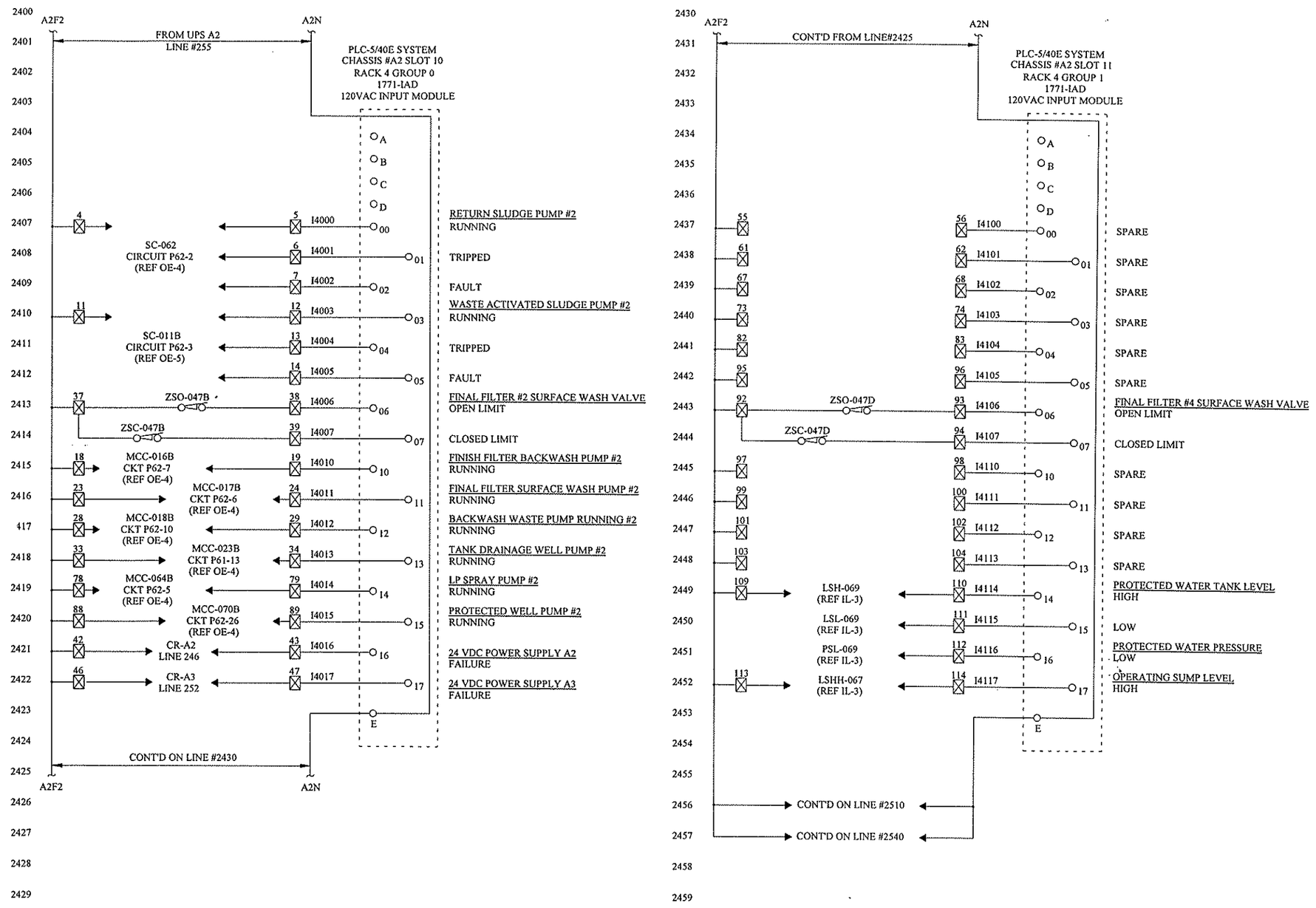

AS BUILT

OPERATIONS BUILDING PLC PANEL

NOTE: 1. ☒ DESIGNATES PLC PANEL TERMINAL
2. PLC TERMINATIONS THIS SHEET ARE ON TERMINAL BLOCK TB2

NO.	DATE	DESCRIPTION	BY	CKD.
		REVISIONS		

LD&A
Lamar Dunn & Associates Inc.
3305 Maloney Road
Knoxville, TN 37920

CITY OF OAK RIDGE
ANDERSON COUNTY, TENNESSEE

PLC DIGITAL INPUTS & OUTPUTS
ELEMENTARY DIAGRAM

DESIGNED BY	CHECKED BY	SCALE:	SHEET IM-24
GSH		NONE	
DRAWN BY	DATE	FILE NO.	OF NO. SHEETS
EGB	10/05/98	OR-9408-D	

LAST DATE MODIFIED 11/12/98

IM24.DWG 1:1

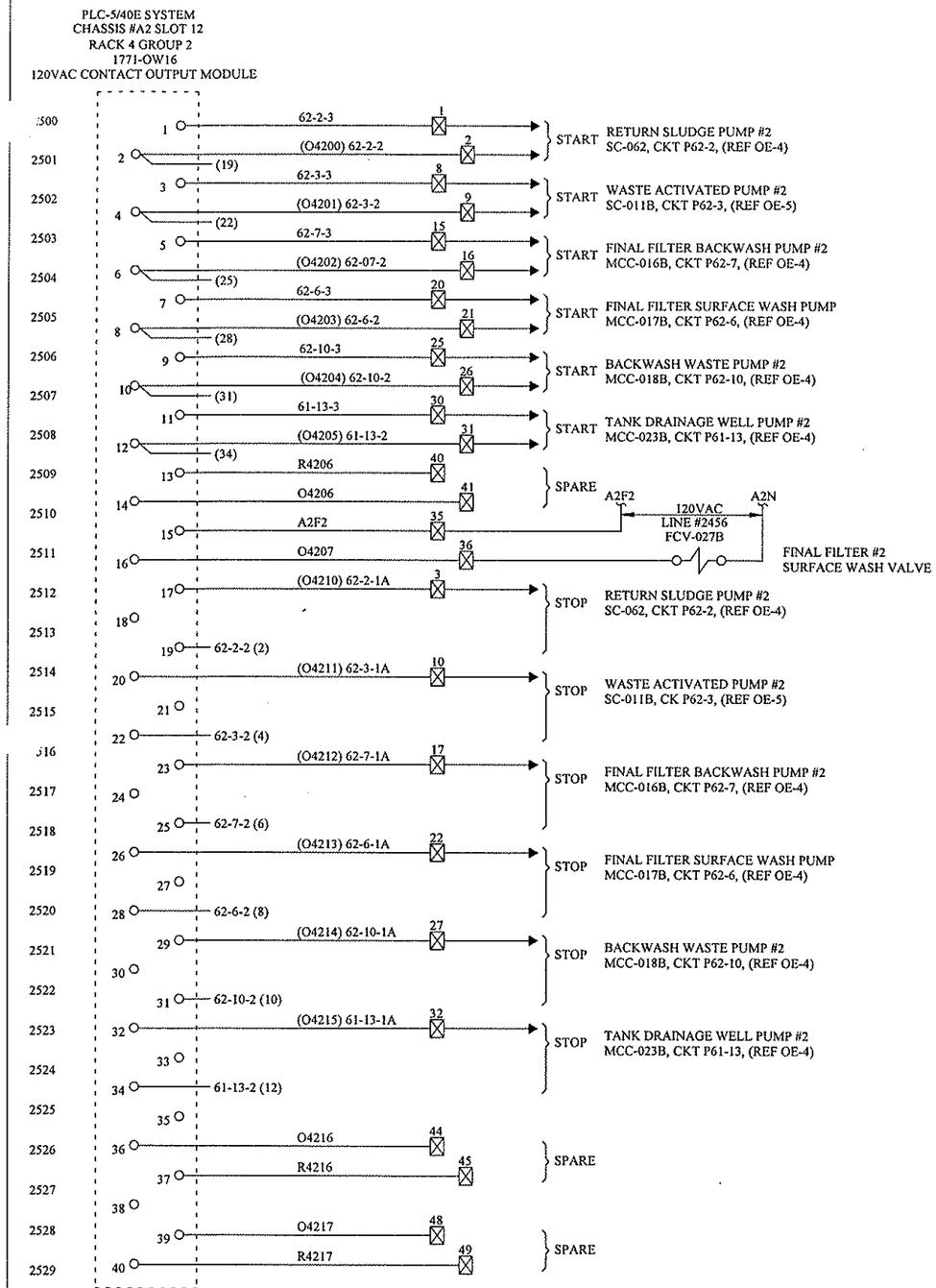

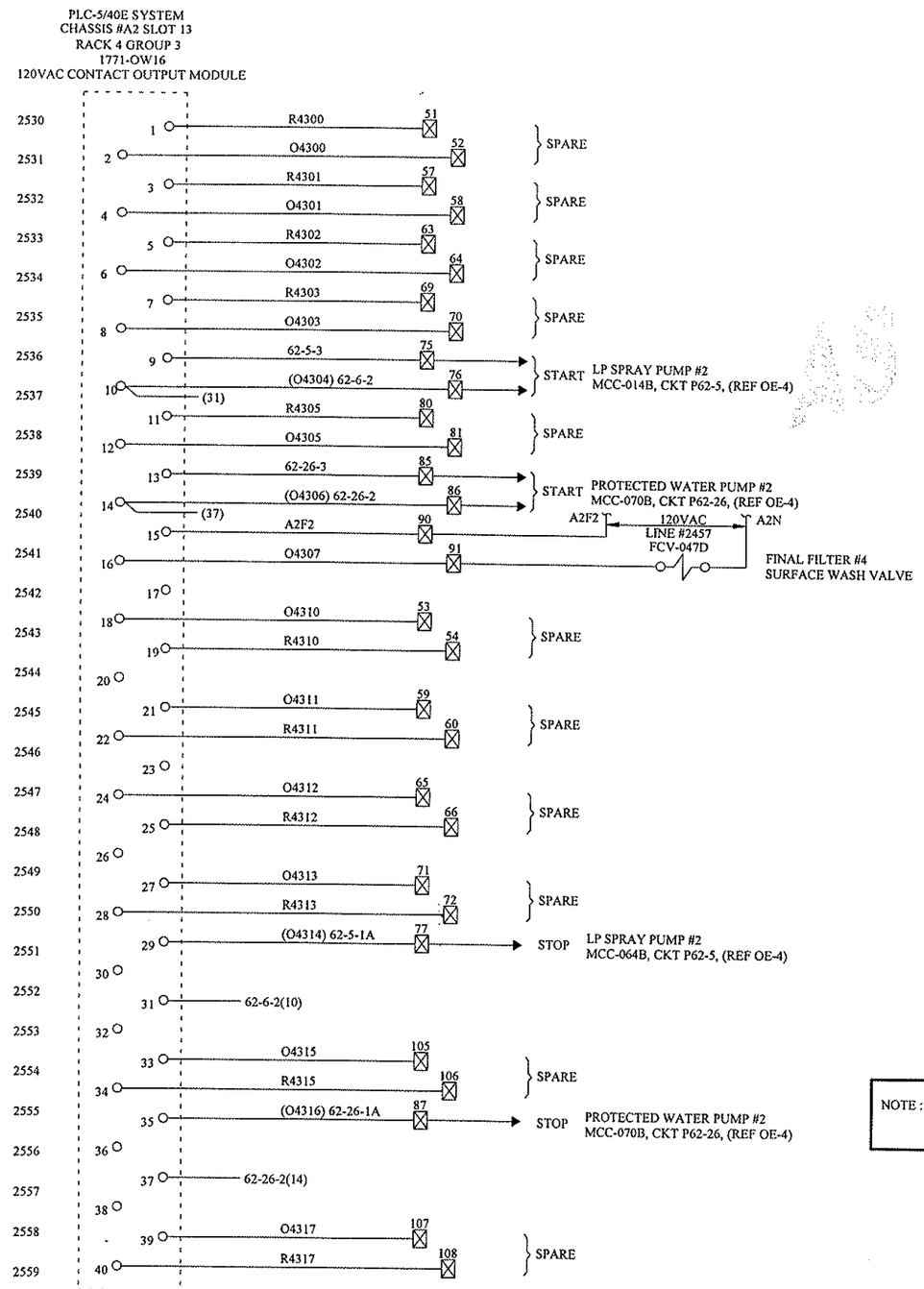

NOTE : TERMINAL BLOCK TB3, TERMINALS 1 - 108 SPARE TERMINALS.

OPERATIONS BUILDING PLC PANEL

NOTE:
1. ☒-DESIGNATES PLC PANEL TERMINAL
2. PLC TERMINATIONS THIS SHEET ARE ON TERMINAL BLOCK TB2

NO	DATE	DESCRIPTION	BY	CKD

REVISIONS

LD&A
Lamar Dunn & Associates Inc.
3305 Maloney Road
Knoxville, TN 37920

CITY OF OAK RIDGE
ANDERSON COUNTY, TENNESSEE

PLC DIGITAL INPUTS & OUTPUTS
ELEMENTARY DIAGRAM

DESIGNED BY	CHECKED BY	SCALE:
GSH		NONE
DRAWN BY	DATE	FILE NO.
EGB	10/04/98	OR-9408-D

SHEET IM-25 OF NO. SHEETS

LAST DATE MODIFIED 11/12/98

IM25.DWG 1:1

Lord & Company, Inc.
Instrumentation & Control Systems

377 Carowinds Boulevard, Suite 203; Fort Mill, SC 29708
Tel: (803) 802- 0060 Fax: (803) 802- 0070

Other Offices
Baltimore, Maryland
Hampton, Virginia
Manassas, Virginia

BLOWER BUILDING

PLC CONTROL PANEL

CHASSIS : B1

Waste Water Treatment Plant Improvements
Liquid Phase Treatment Project

Oak Ridge, TN

AS - BUILT WIRING DIAGRAMS

Engineer.....:	*Lamar Dunn & Associates*
Contractor.....:	*Southern Constructors*
Supplier.....:	*Lord & Company, Inc.*
L&C Project #:	*SE-1728*
Date.....:	*10/24/00*

Corporate Office: 8811 Sudley Road, Manassas, VA 20110

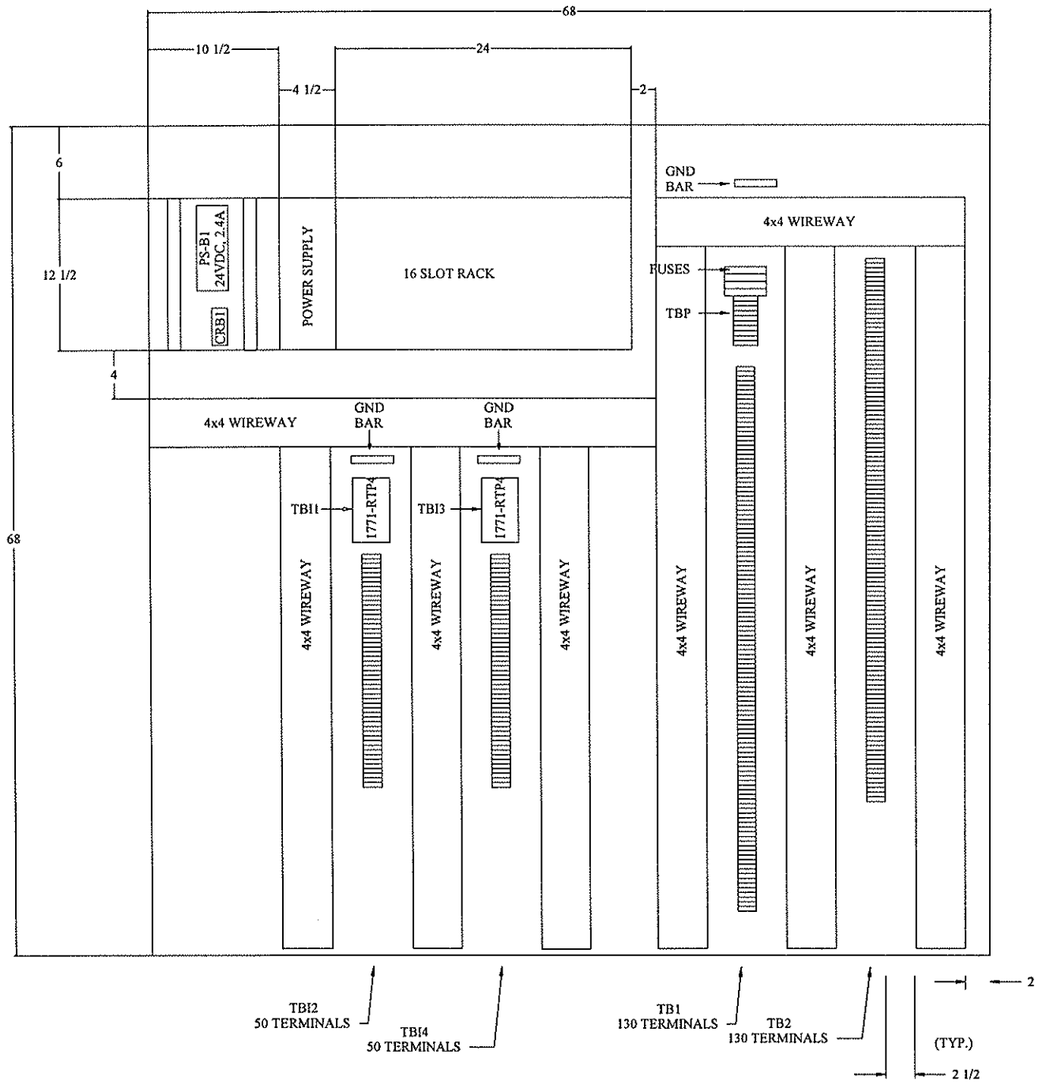

NO	DATE	DESCRIPTION	BY	CKD
1	02/11/00	I. & C SUBMITTAL CHANGES, ADDED PS-B1 & RELAY	FDM	

REVISIONS

LD&A
Lamar Dunn & Associates Inc.
3309 Maloney Road
Knoxville, TN 37920

CITY OF OAK RIDGE
ANDERSON COUNTY, TENNESSEE

BLOWER BUILDING
PLC PANEL LAYOUT

DESIGNED BY	CHECKED BY	SCALE:	SHEET IP-2
GSH		NONE	
DRAWN BY	DATE	FILE NO.	OF NO. SHEETS
EGB	04-98	OR-9408-D	

LAST DATE MODIFIED 10/27/98

PAN2.DWG

AS BUILT

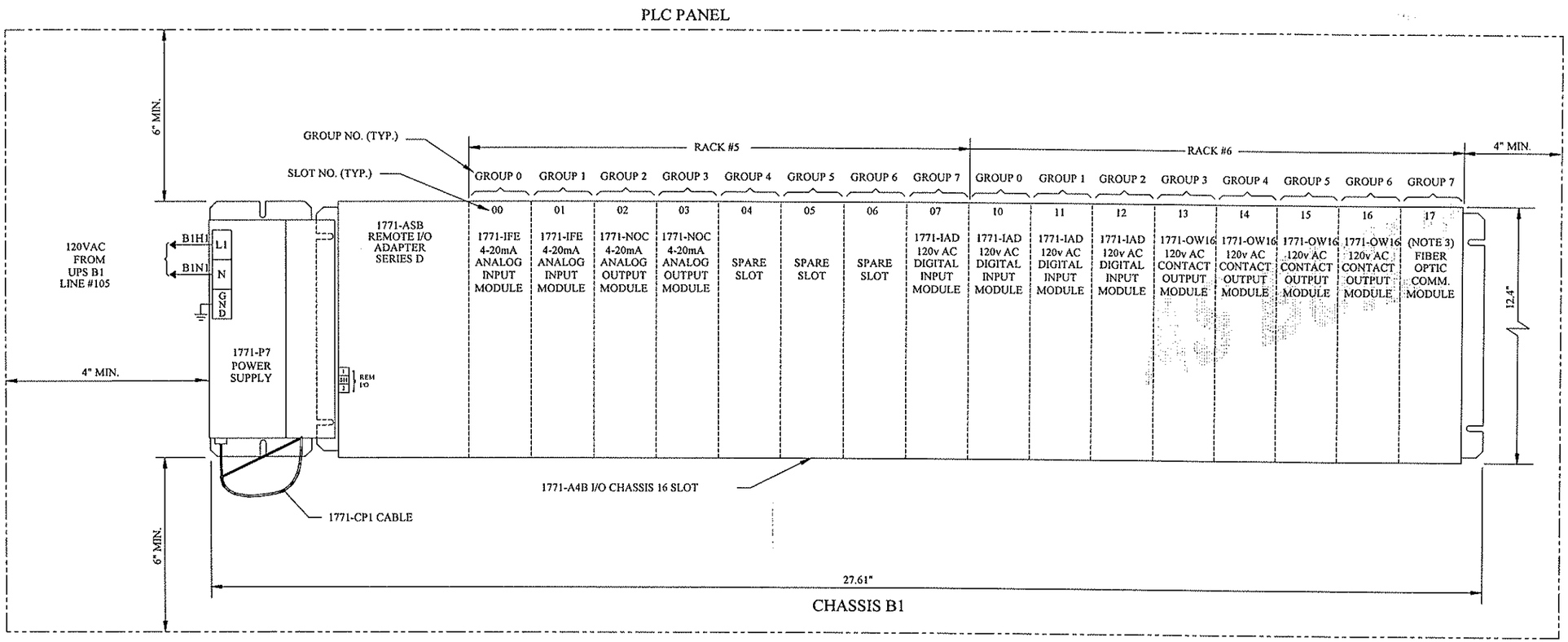

1771-A4B POWER SUPPLY CONFIGURATION PLUG: RIGHT POSITION

1771-A4B BACKPLANE DIP SWITCH SETTINGS:
1-OFF
2-ON
3-OFF
4-OFF
5-ON
6-OFF
7-OFF
8-OFF

1771-ASB DIP SWITCH: DIP SWITCH #1 SETTINGS:
1-ON
2-ON
3-ON
4-OFF
5-ON
6-OFF
7-ON
8-ON

1771-ASB DIP SWITCH: DIP SWITCH #2 SETTINGS:
1-ON
2-OFF
3-OFF
4-OFF
5-OFF
6-OFF

1771-ASB PLUG CONNECTION SWITCH SETTINGS:
1-LEFT
2-LEFT
3-LEFT

NOTE:
1. "EACH I/O MODULE IS SLOTTED IN TWO PLACES AT THE REAR EDGE. THESE SLOTS ARE INTENDED TO MATE WITH THE PLASTIC KEYS SUPPLIED WITH THE CHASSIS. POSITION THE KEYS IN THE BACKPLANE CONNECTOR TO CORRESPOND WITH THE SLOTS IN A PARTICULAR MODULE, TO GUARD AGAINST THE INSERTION OF THE WRONG MODULE." (REF. ALLEN-BRADLEY PUBLICATION 1771-2.49)
2. INPUT VOLTAGE RANGE FOR 1771-P7 POWER SUPPLY IS 97-132 VAC.
3. FIBER OPTIC COMMUNICATION MODULE PHOENIX DIGITAL OCM-DPR-85-D-ST.

NO.	DATE	DESCRIPTION	BY	CKD

REVISIONS

LD&A
Lamar Dunn & Associates Inc.
3305 Maloney Road
Knoxville, TN 37920

CITY OF OAK RIDGE
ANDERSON COUNTY, TENNESSEE

PLC BLOCK DIAGRAM

DESIGNED BY	CHECKED BY	SCALE:
GSH		NONE
DRAWN BY	DATE	FILE NO.
EGB	09/22/98	OR-9408-D

SHEET IM-8 OF NO. SHEETS

LAST DATE MODIFIED 11/02/98

IMR. DWG 1:1

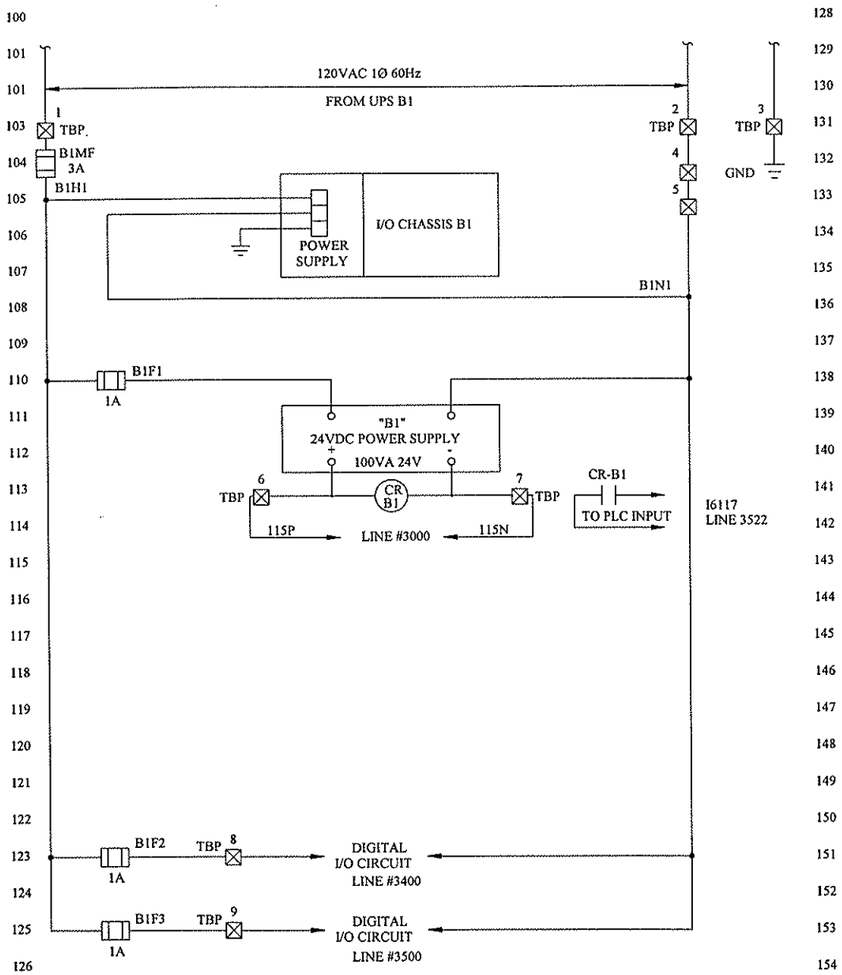

AS BUILT

NO	DATE	DESCRIPTION	BY	CKD.
1	02/11/00	L & C SUBMITTAL CHANGES, ADDED MAIN FUSE	FDM	

REVISIONS

LD&A
Lamar Dunn & Associates Inc.
3305 Maloney Road
Knoxville, TN 37920

CITY OF OAK RIDGE
ANDERSON COUNTY, TENNESSEE

BLOWER BUILDING
PLC CONTROL POWER

DESIGNED BY	CHECKED BY	SCALE:	SHEET IM-1
GSH	JMH	NONE	
DRAWN BY	DATE	FILE NO.	OF NO. SHEETS
EGB	04-98	OR-9408-D	

LAST DATE MODIFIED 10/27/98

PLC1.DWG 1:1

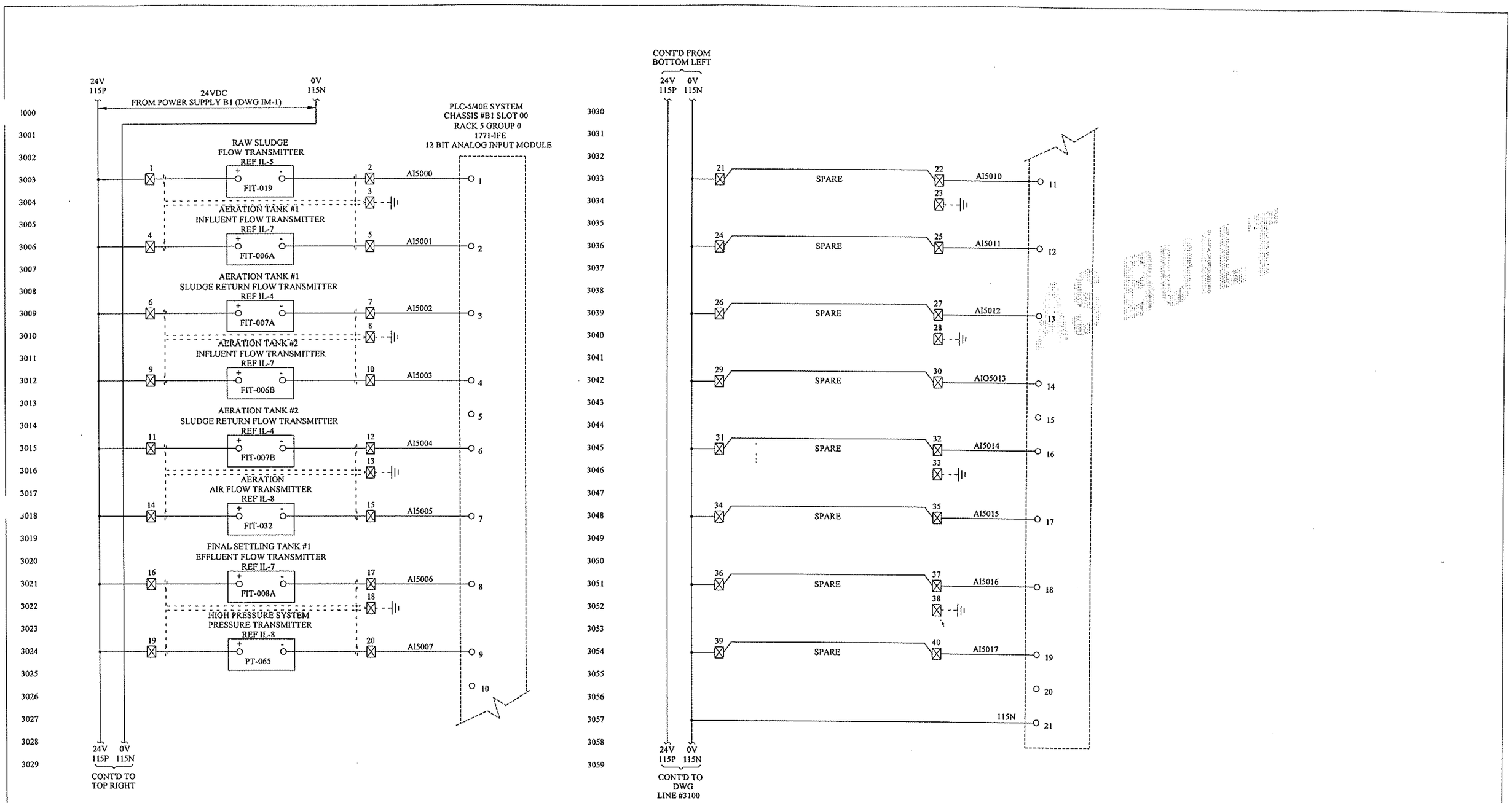

BLOWER BUILDING PLC

NOTE: 1. ☒-DESIGNATES PLC PANEL TERMINAL
2. PLC TERMINATIONS THIS SHEET ARE ON TERMINAL BLOCK TB12

NO.	DATE	DESCRIPTION	BY	CKD.
		REVISIONS		

LD&A
Lamar Dunn & Associates Inc.
3305 Maloney Road
Knoxville, TN 37920

CITY OF OAK RIDGE
ANDERSON COUNTY, TENNESSEE

PLC ANALOG INPUTS
ELEMENTARY DIAGRAM

DESIGNED BY	CHECKED BY	SCALE:	SHEET IM-30
GSH		NONE	OF NO. SHEETS
DRAWN BY	DATE	FILE NO.	
EGB	11/16/98	OR-9408-D	

LAST DATE MODIFIED 12/29/98

IM30.DWG 1:1

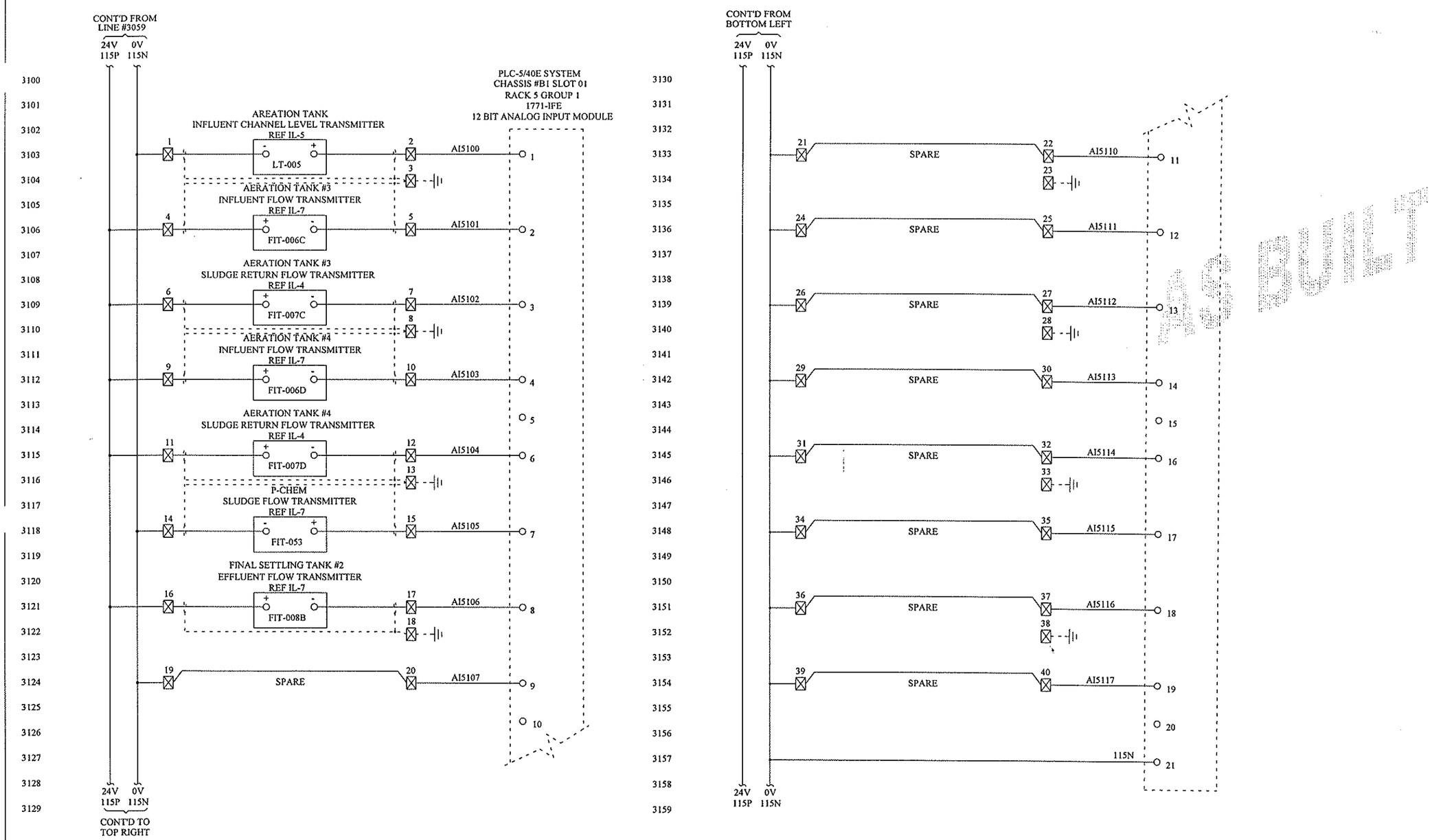

BLOWER BUILDING PLC

NOTE: 1. ☒-DESIGNATES PLC PANEL TERMINAL
2. PLC TERMINATIONS THIS SHEET ARE ON TERMINAL BLOCK TBI4

NO.	DATE	DESCRIPTION	BY	CKD.
1	02/11/00	L & C SUBMITTAL CHANGTES, CORRECTED RUNG NUMBERS	FDM	

REVISIONS

LD&A
Lamar Dunn & Associates Inc.
2001 Maloney Road
Knoxville, TN 37920

CITY OF OAK RIDGE
ANDERSON COUNTY, TENNESSEE

PLC ANALOG INPUTS
ELEMENTARY DIAGRAM

DESIGNED BY	CHECKED BY	SCALE:	SHEET
GSH		NONE	IM-31
DRAWN BY	DATE	FILE NO.	OF NO. SHEETS
EGB	11/16/98	OR-9408-D	

LAST DATE MODIFIED 12/29/98

IM31.DWG 1:1

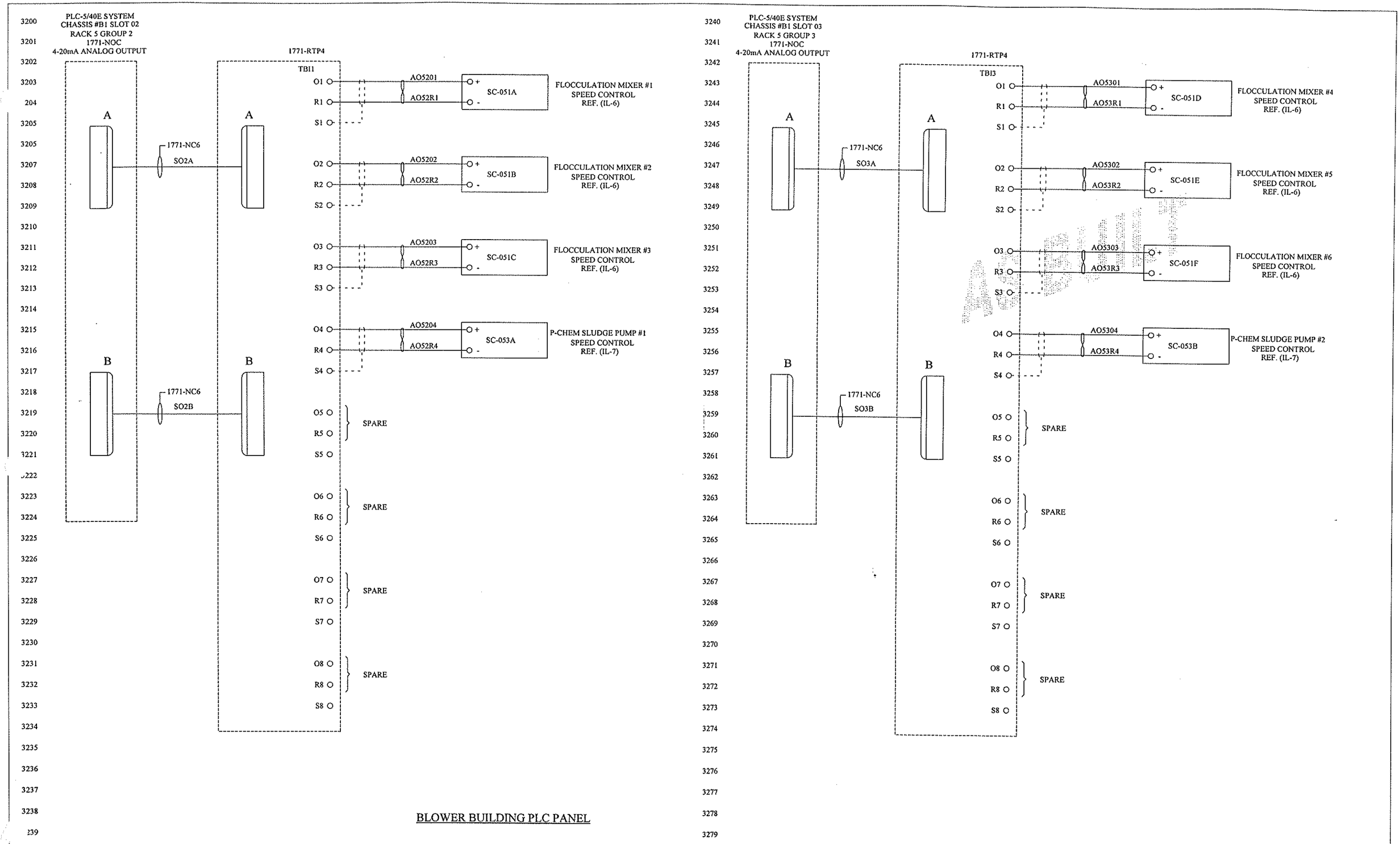

BLOWER BUILDING PLC PANEL

NO.	DATE	DESCRIPTION	BY	CKD

REVISIONS

LD&A
Lamar Dunn & Associates Inc.
3305 Maloney Road
Knoxville, TN 37920

CITY OF OAK RIDGE
ANDERSON COUNTY, TENNESSEE

PLC ANALOG OUTPUTS
ELEMENTARY DIAGRAM

DESIGNED BY	CHECKED BY	SCALE:	SHEET IM-32
GSH		NONE	
DRAWN BY	DATE	FILE NO.	OF NO. SHEETS
EGB	11/16/98	OR-9408-D	

LAST DATE MODIFIED 12/20/98

IM32.DWG 1:1

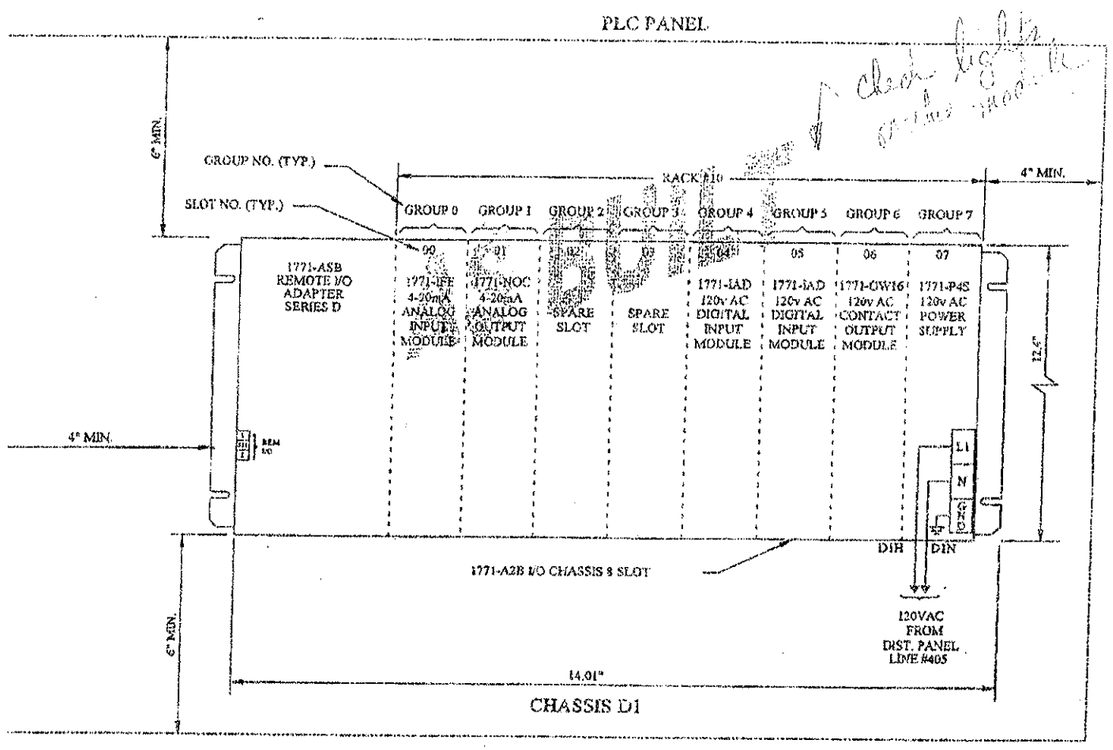

1771-A2B POWER SUPPLY CONFIGURATION PLUG: LEFT POSITION

1771-A2B BACKPLANE DIP SWITCH SETTINGS:

1-OFF
2-ON
3-OFF
4-OFF
5-ON
6-OFF
7-OFF
8-OFF

1771-ASB DIP SWITCH: DIP SWITCH #1 SETTINGS:

1-ON
2-ON
3-OFF
4-ON
5-ON
6-ON
7-ON
8-ON

1771-ASB DIP SWITCH: DIP SWITCH #2 SETTINGS:

1-ON
2-OFF
3-OFF
4-OFF
5-OFF
6-OFF

1771-ASB PLUG CONNECTION SWITCH SETTINGS:

1-LEFT
2-LEFT
3-LEFT

NOTE:
1. "EACH I/O MODULE IS SLOTTED IN TWO PLACES AT THE REAR EDGE. THESE SLOTS ARE INTENDED TO MATE WITH THE PLASTIC KEYS SUPPLIED WITH THE CHASSIS. POSITION THE KEYS IN THE BACKPLANE CONNECTOR TO CORRESPOND WITH THE SLOTS IN A PARTICULAR MODULE, TO GUARD AGAINST THE INSERTION OF THE WRONG MODULE." (REF. ALLEN-BRADLEY PUBLICATION 1771-2.49)
2. INPUT VOLTAGE RANGE FOR 1771-P4 POWER SUPPLY IS 97-132 VAC.
3. FIBER OPTIC COMMUNICATION MODULE PHOENIX DIGITAL OCM-DPR-85-D-ST.

)GE ENNESSEE	PLC BLOCK DIAGRAM	DESIGNED BY: GSH	CHECKED BY	SCALE: NONE	SHEET IM-9
		DRAWN BY: EGB	DATE: 09/22/98	FILE NO.: CR-9438-D	OF NO. SHEETS

LAST DATE MODIFIED 12/06/99

I-49. DWG 1:1

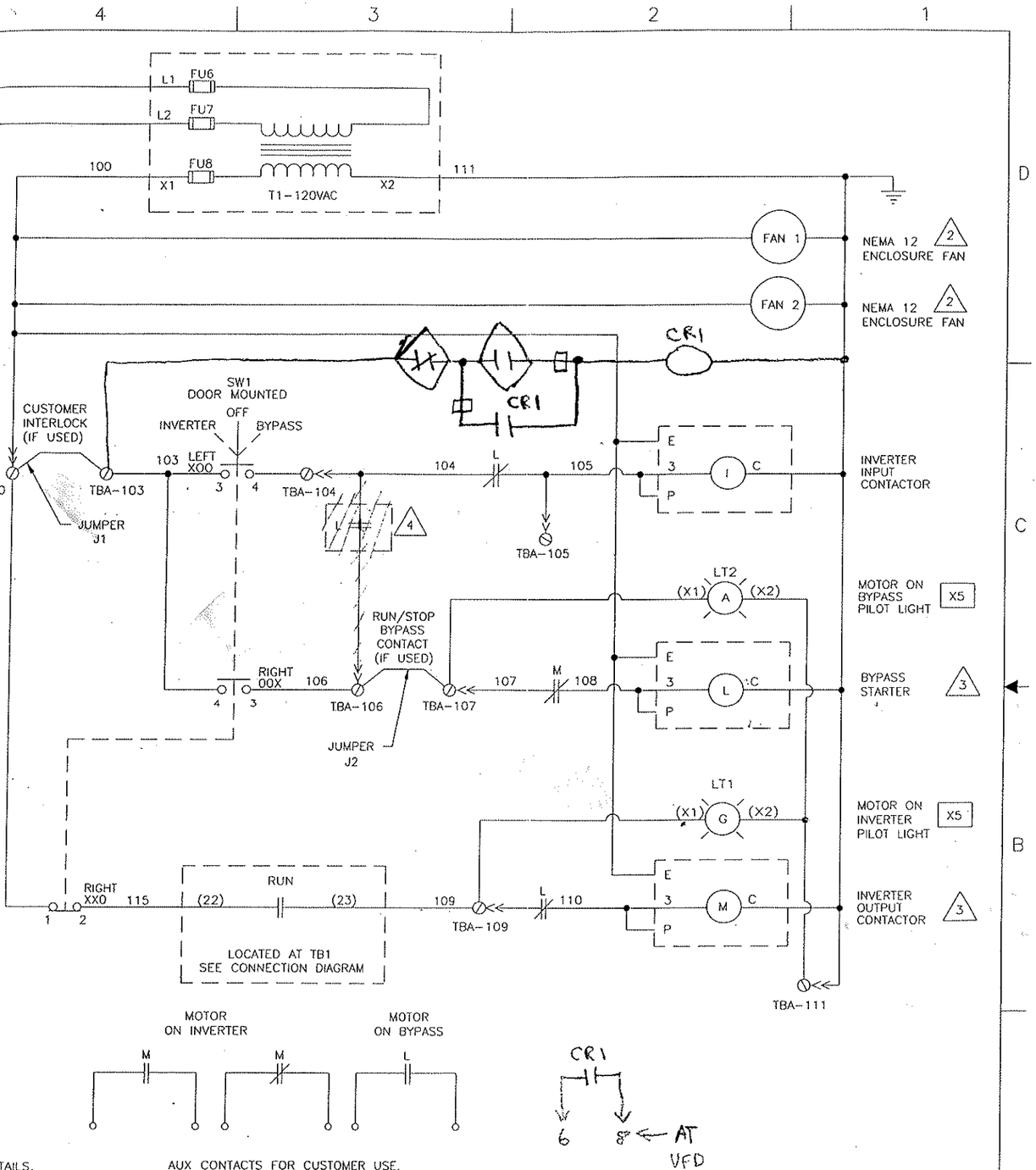

SCALE 1/1

TURTLE PARK

Cutler-Hammer MILWAUKEE, WI

THE INFORMATION ON THIS DOCUMENT IS CREATED BY CUTLER-HAMMER. IT IS DISCLOSED IN CONFIDENCE AND IS ONLY TO BE USED FOR THE PURPOSE IN WHICH IT IS SUPPLIED.

DFTR PRW	DATE 2/5/99	TITLE I-O-B BYPASS/ LIGHTS	
CKD RRH	DATE 2/5/99		
APPD RRH	DATE 2/5/99	PRODUCT 9000	DWG TYPE CONTROL SCHEMATIC
FEDERAL ID NO	PRODUCT CODE	G.O.	SHEET 1
REVISION 2	DWG. SIZE D	DWG NO. OED-090100-0164	

(AB) PLANT INFLUENT PUMPS #3 + #4
@ TURTLE PARK

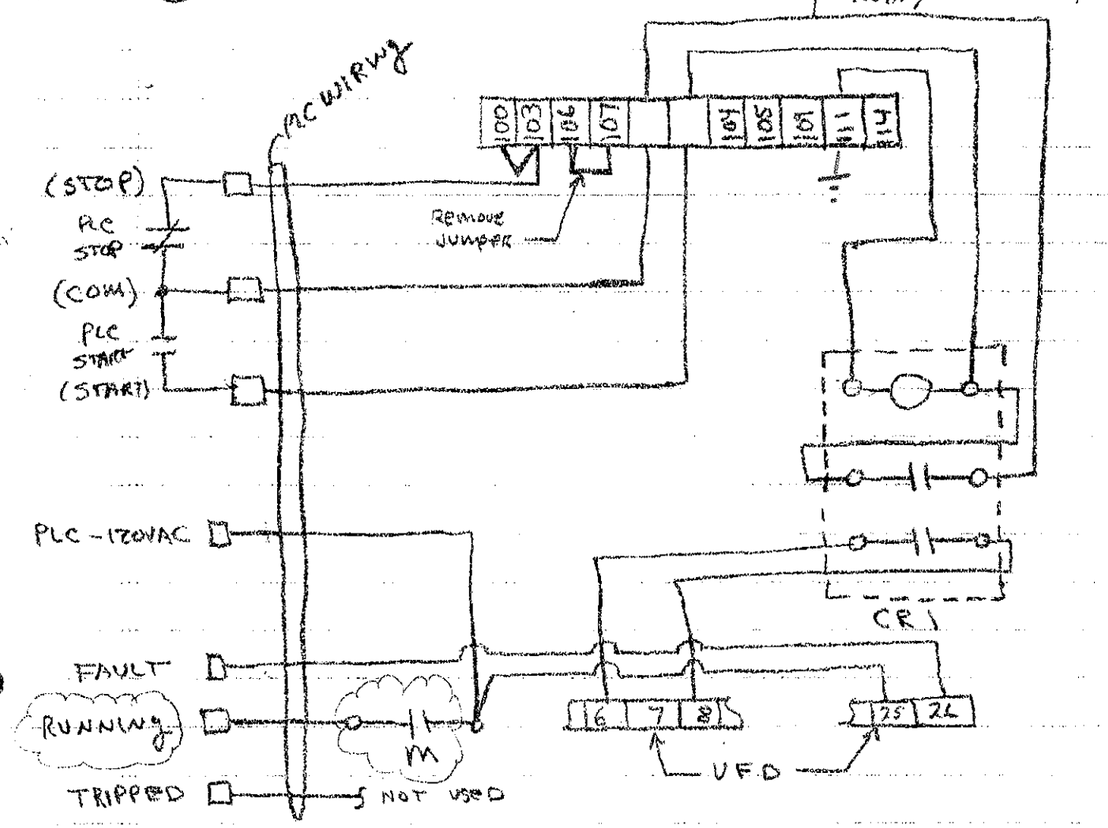

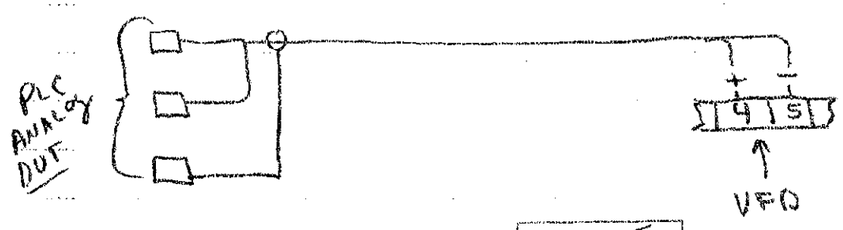

Post-It™ brand fax transmittal memo 7671 | # of pages ▸ 5

To Tom Roberts	From "SANDY"
Co.	Co.
Dept.	Phone #
Fax # 425-1652	Fax #

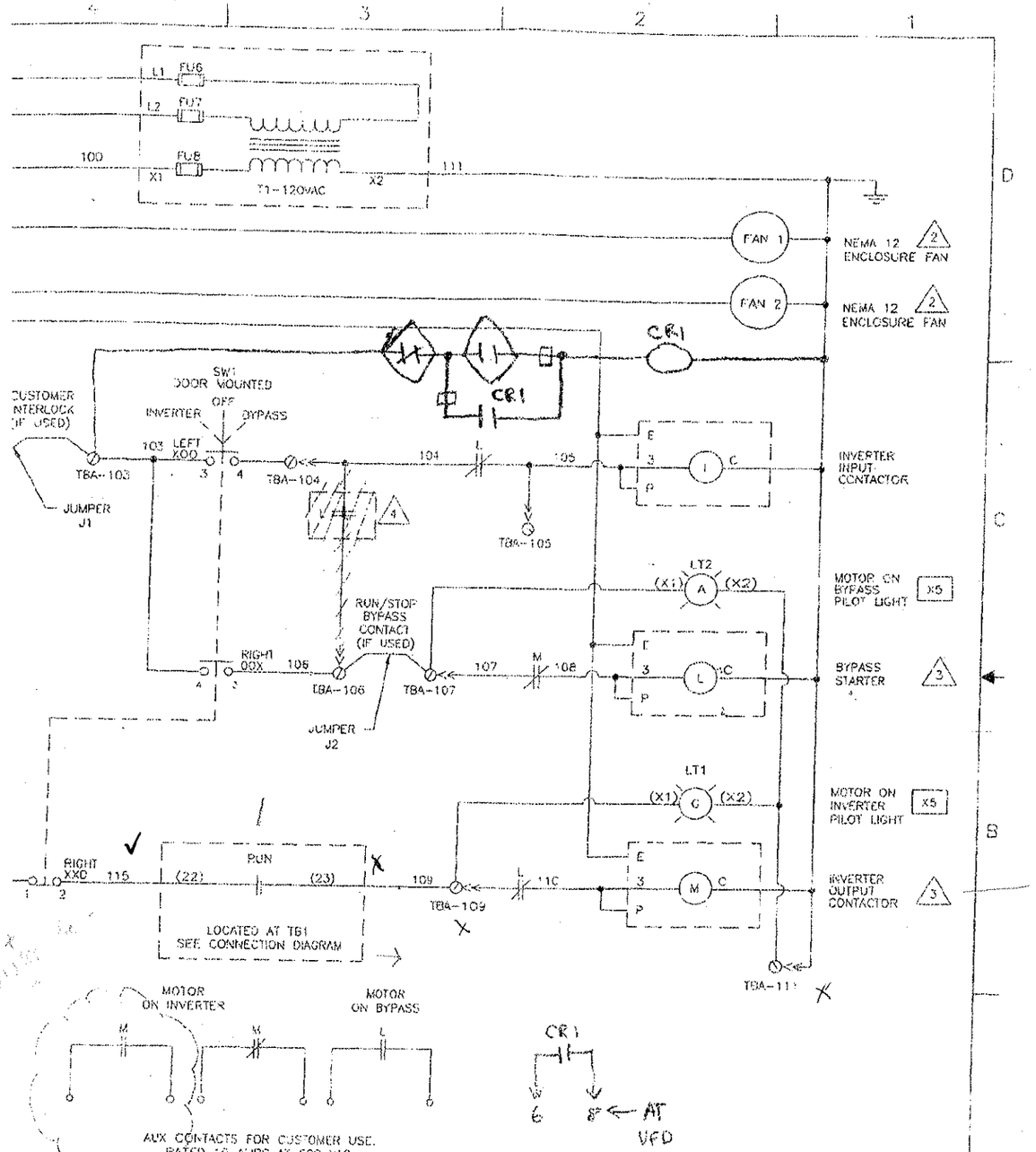

SCALE 1/1

TURTLE PARK

THE INFORMATION ON THIS DOCUMENT IS CREATED BY CUTLER-HAMMER. IT IS DISCLOSED IN CONFIDENCE AND IS ONLY TO BE USED FOR THE PURPOSE IN WHICH IT IS SUPPLIED.

DFTR PRW	DATE 2/5/99	Cutler-Hammer MILWAUKEE, WI	
CKD RRH	DATE 2/5/99	TITLE I-O-B BYPASS/ LIGHTS	
APPD RRH	DATE 2/5/99	PRODUCT 9000	DWG TYPE CONTROL SCHEMATIC
FEDERAL ID NO / PRODUCT CODE	REVISION 2	DWG. SIZE D	S.O. / DWG NO. CED-090100-0164 / SHEET 1

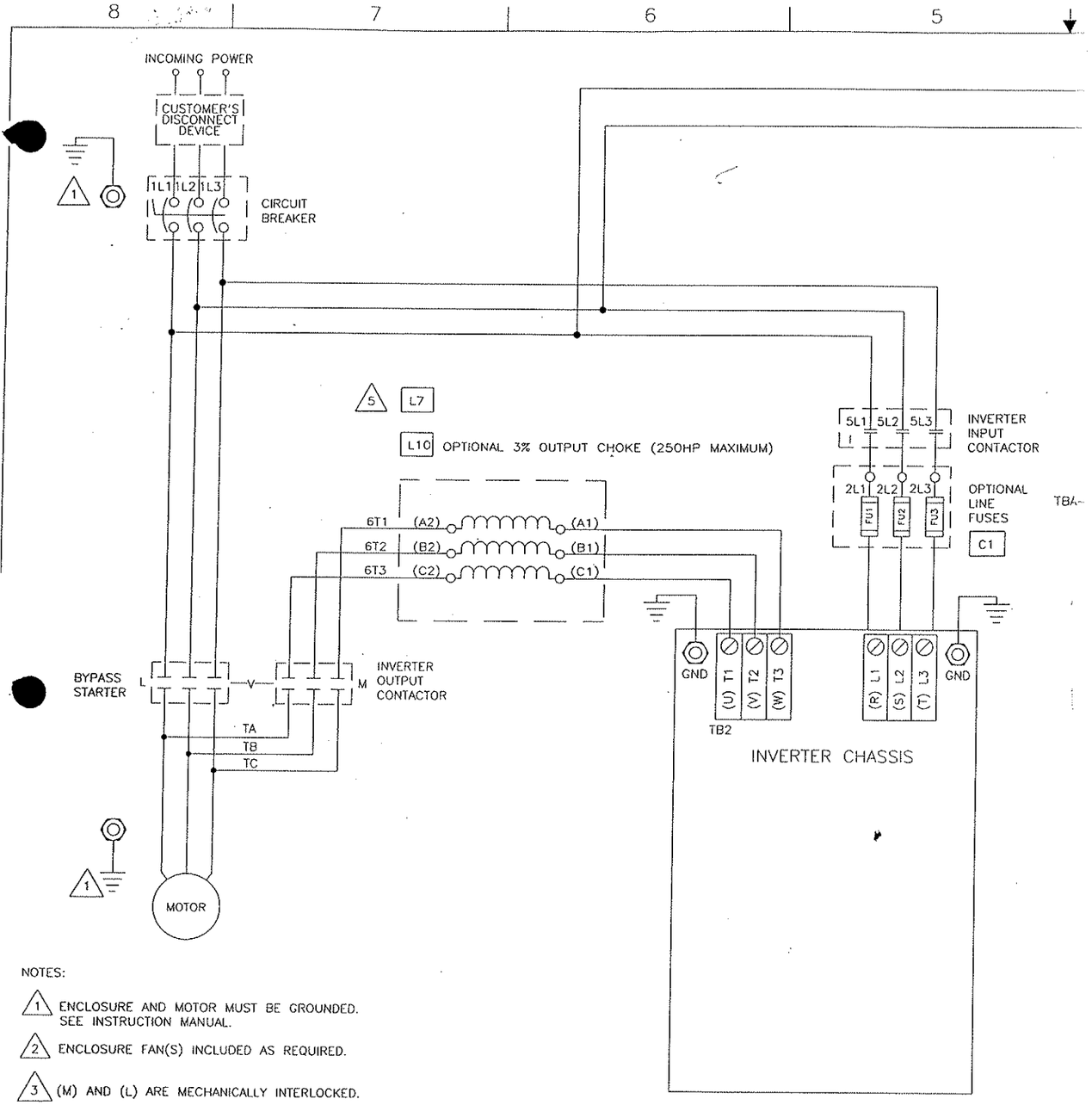

NOTES:

1. ENCLOSURE AND MOTOR MUST BE GROUNDED. SEE INSTRUCTION MANUAL.
2. ENCLOSURE FAN(S) INCLUDED AS REQUIRED.
3. (M) AND (L) ARE MECHANICALLY INTERLOCKED.
4. FUNCTIONAL ONLY IF AUTOTRANSFER OPTION IS SPECIFIED.

TBAH >> TBA INDICATES HARNESS PLUG (TBAH) CONNECTOR AT TBA.

XX MOD CODE

5. L7 OPTIONAL 1000v/us dv/dt OUTPUT FILTER.

L7 IS NOT AVAILABLE WITH DYNAMIC BRAKING OR UNITS ABOVE 300HP.
SEE THE dv/dt FILTER DIAGRAM (OED-900001-000*) FOR INTERCONNECTING WIRE

REVISION		
NEW RELEASE	25775	2
UPDATE TITLE BLOCK		

03
11

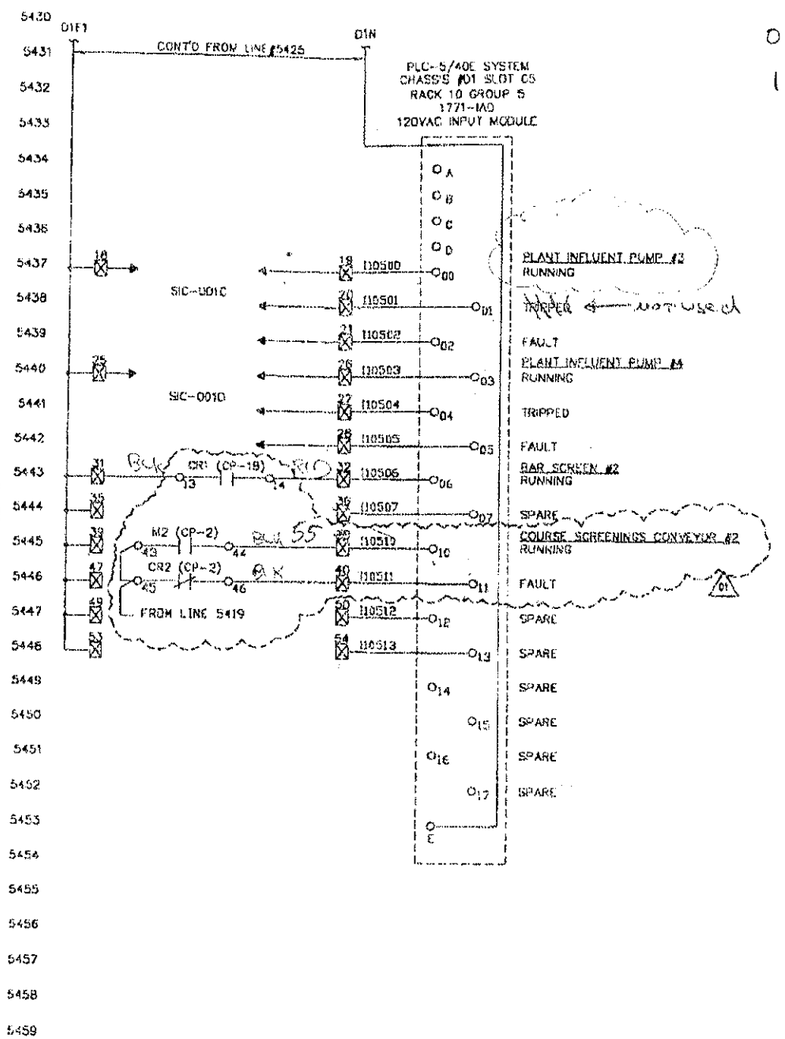

NOTES: 1. ☒ -DESIGNATES
2. PLC TERMINATIO
3. CP-2 DENOTES
4. CP-14 and CP-

RTLE PARK PLC PANEL

	CITY OF OAK RIDGE ANDERSON COUNTY, TENNESSEE	PLC DIGITAL INPUTS & OUTPUTS ELEMENTARY DIAGRAM

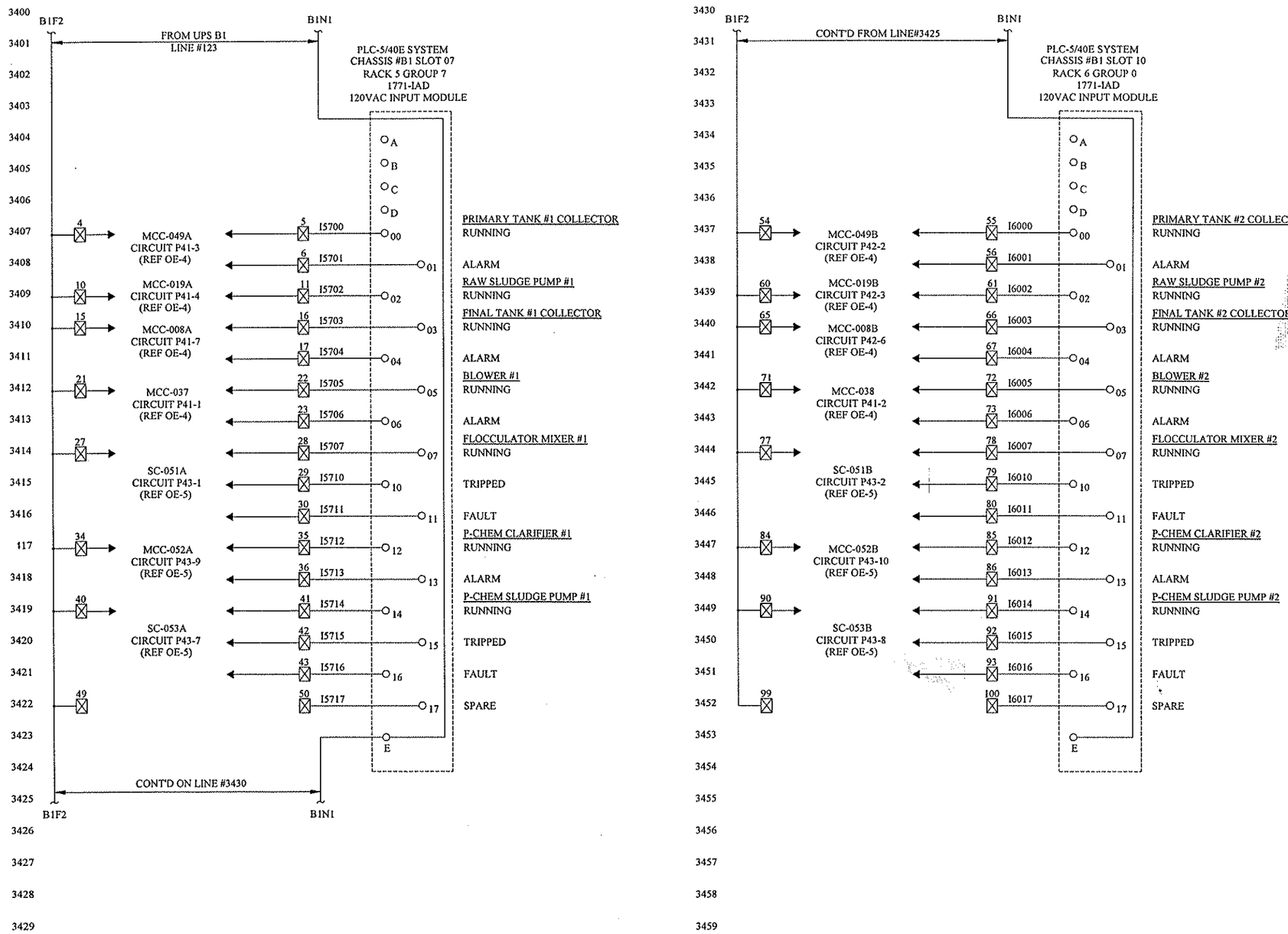

AS BUILT

BLOWER BUILDING PLC PANEL

NOTE: 1. ☒ -DESIGNATES PLC PANEL TERMINAL
2. PLC TERMINATIONS THIS SHEET ARE ON TERMINAL BLOCK TB1

NO.	DATE	DESCRIPTION	BY	CKD.
		REVISIONS		

LD&A
Lamar Dunn & Associates Inc.
3309 Maloney Road
Knoxville, TN 37920

CITY OF OAK RIDGE
ANDERSON COUNTY, TENNESSEE

PLC DIGITAL INPUTS & OUTPUTS
ELEMENTARY DIAGRAM

DESIGNED BY	CHECKED BY	SCALE:	SHEET
GSH		NONE	E-M-34
DRAWN BY	DATE	FILE NO.	OF NO. SHEETS
EGB	11/16/98	OR-9408-D	

LAST DATE MODIFIED 12/20/98

BM34.DWG 1:1

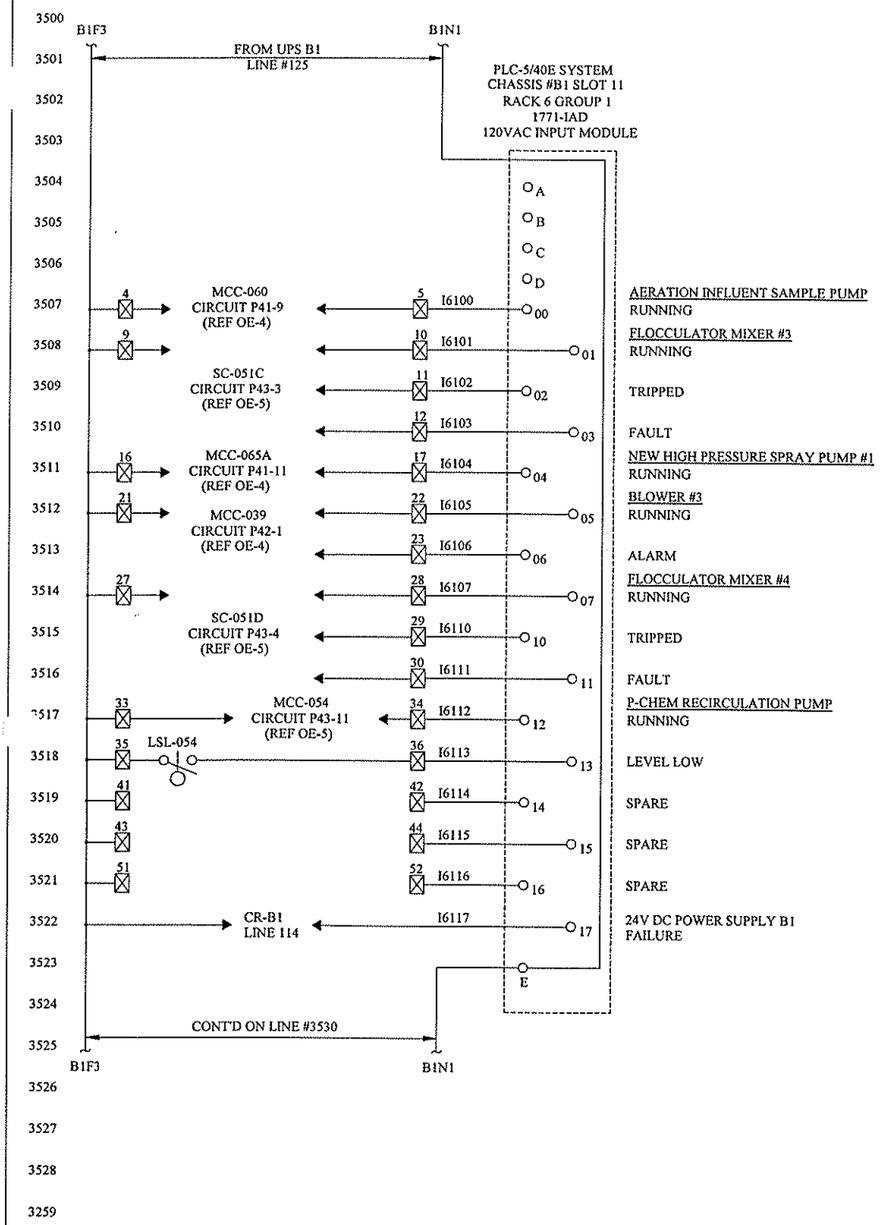

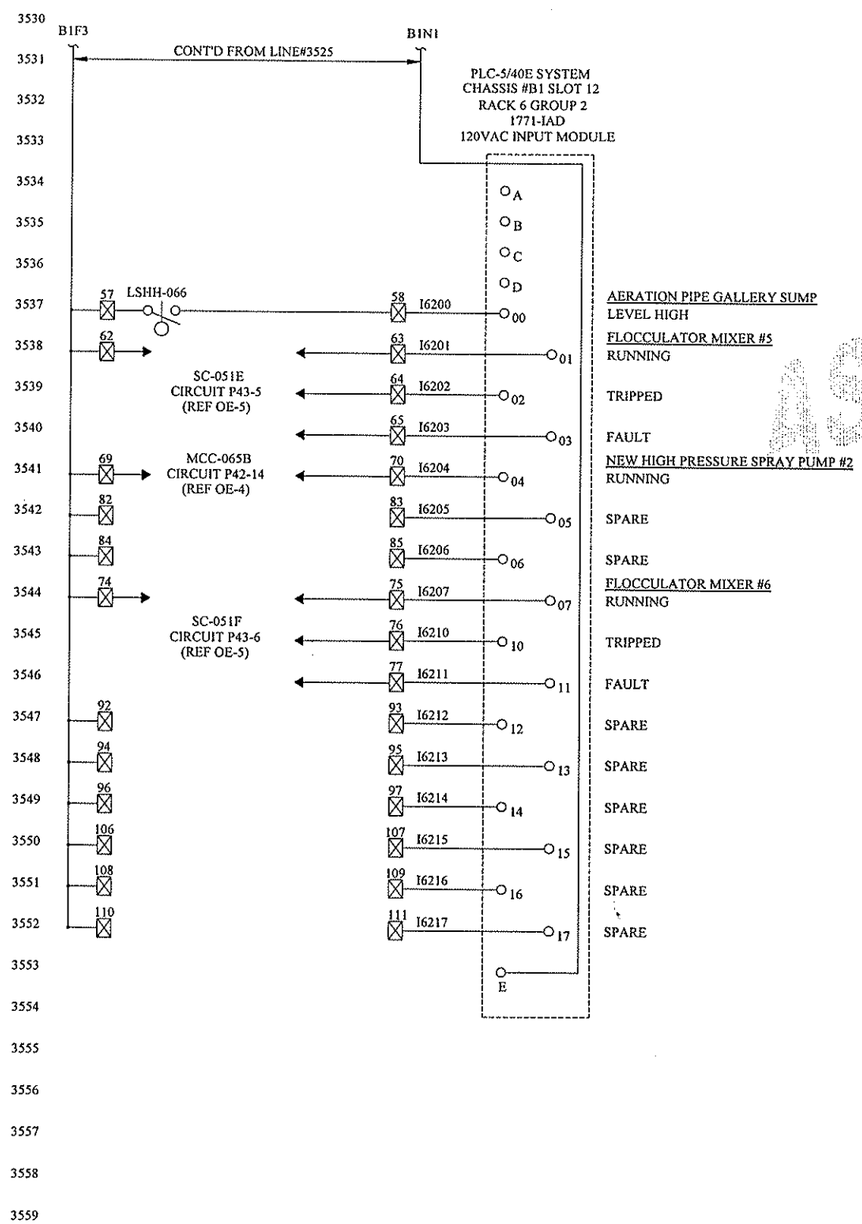

AS BUILT

BLOWER BUILDING PLC PANEL

NOTE: 1. ☒-DESIGNATES PLC PANEL TERMINAL
2. PLC TERMINATIONS THIS SHEET ARE ON TERMINAL BLOCK TB2

NO.	DATE	DESCRIPTION	BY	CKD.
		REVISIONS		

LD&A
Lamar Dunn & Associates Inc.
1305 Maloney Road
Knoxville, TN 37920

CITY OF OAK RIDGE
ANDERSON COUNTY, TENNESSEE

PLC DIGITAL INPUTS & OUTPUTS
ELEMENTARY DIAGRAM

DESIGNED BY	CHECKED BY	SCALE:	SHEET IM-35
GSH		NONE	
DRAWN BY	DATE	FILE NO.	OF NO. SHEETS
EGB	11/16/98	OR-9408-D	

LAST DATE MODIFIED 12/20/98

IM35.DWG 1:1

PLC-5/40E SYSTEM
CHASSIS #B1 SLOT 13
RACK 6 GROUP 3
1771-OW16
120VAC CONTACT OUTPUT MODULE

Terminal	Wire	Output	Function	Description
1	41-3-3 (R6300)	1	START	PRIMARY TANK #1 COLLECTOR MCC-049A, CKT P41-3, (REF OE-4)
2	(19) (O6300) 41-3-2	2		
3	41-4-3 (R6301)	7	START	RAW SLUDGE PUMP #1 MCC-019A, CKT P41-4, (REF OE-4)
4	(22) (O6301) 41-4-2	8		
5	41-7-3 (R6302)	12	START	FINAL TANK #1 COLLECTOR MCC-008A, CKT P41-7, (REF OE-4)
6	(25) (O6302) 41-7-2	13		
7	41-1-3 (R6303)	18	START	BLOWER #1 MCC-037, P41-1, (REF OE-4)
8	(28) (O6303) 41-1-2	19		
9	43-1-3 (R6304)	24	START	FLOCCULATOR MIXER #1 SC-051A, P43-1, (REF OE-5)
10	(31) (O6304) 43-1-2	25		
11	43-9-3 (R6305)	31	START	P-CHEM CLARIFIER #1 MCC-052A, P43-9, (REF OE-5)
12	(34) (O6305) 43-9-2	32		
13	43-7-3 (R6306)	37	START	P-CHEM SLUDGE PUMP #1 SC-053A, P43-7, (REF OE-5)
14	(37) (O6306) 43-7-2	38		
15	R6307	45	SPARE	
16	O6307	46		
17	(O6310) 41-3-1A	3	STOP	PRIMARY TANK #1 COLLECTOR MCC-049A, CKT P41-3, (REF OE-4)
18				
19	41-3-2 (2)			
20	(O6311) 41-4-1A	9	STOP	RAW SLUDGE PUMP #1 MCC-019A, CKT P41-4, (REF OE-4)
21				
22	41-4-2 (4)			
23	(O6312) 41-7-1A	14	STOP	FINAL TANK #1 COLLECTOR MCC-008A, CKT P41-7, (REF OE-4)
24				
25	41-7-2 (6)			
26	(O6313) 41-1-1A	20	STOP	BLOWER #1 MCC-037, P41-1, (REF OE-4)
27				
28	41-1-2 (8)			
29	(O6314) 43-1-1A	26	STOP	FLOCCULATOR MIXER #1 SC-051A, P43-1, (REF OE-5)
30				
31	43-1-2 (10)			
32	(O6315) 43-9-1A	33	STOP	P-CHEM CLARIFIER #1 MCC-052A, P43-9, (REF OE-5)
33				
34	43-9-2 (12)			
35				
36	(O6316) 43-7-1A	39	STOP	P-CHEM SLUDGE PUMP #1 SC-053A, P43-7, (REF OE-5)
37	43-7-2 (14)			
38				
39	O6317	47	SPARE	
40	R6317	48		

PLC-5/40E SYSTEM
CHASSIS #B1 SLOT 14
RACK 6 GROUP 4
1771-OW16
120VAC CONTACT OUTPUT MODULE

Terminal	Wire	Output	Function	Description
1	42-2-3 (R6400)	51	START	PRIMARY TANK #2 COLLECTOR MCC-049B, CKT P42-2, (REF OE-4)
2	(19) (O6400) 42-2-2	52		
3	42-3-3 (R6401)	57	START	RAW SLUDGE PUMP #2 MCC-019B, CKT P42-3, (REF OE-4)
4	(22) (O6401) 42-3-2	58		
5	42-6-3 (R6402)	62	START	FINAL TANK #2 COLLECTOR MCC-008B, CKT P42-6, (REF OE-4)
6	(25) (O6402) 42-6-2	63		
7	41-2-3 (R6403)	68	START	BLOWER #2 MCC-038, P41-2, (REF OE-4)
8	(28) (O6403) 41-2-2	69		
9	43-2-3 (R6404)	74	START	FLOCCULATOR MIXER #2 SC-051B, P43-2, (REF OE-5)
10	(31) (O6404) 43-2-2	75		
11	43-10-3 (R6405)	81	START	P-CHEM CLARIFIER #2 MCC-052B, P43-10, (REF OE-5)
12	(34) (O6405) 43-10-2	82		
13	43-8-3 (R6406)	87	START	P-CHEM SLUDGE PUMP #2 SC-053B, P43-8, (REF OE-5)
14	(37) (O6406) 43-8-2	88		
15	R6407	95	SPARE	
16	O6407	96		
17	(O6410) 42-2-1A	53	STOP	PRIMARY TANK #2 COLLECTOR MCC-049B, CKT P42-2, (REF OE-4)
18				
19	42-2-2 (2)			
20	(O6411) 42-3-1A	59	STOP	RAW SLUDGE PUMP #2 MCC-019B, CKT P42-3, (REF OE-4)
21				
22	42-3-2 (4)			
23	(O6412) 42-6-1A	64	STOP	FINAL TANK #2 COLLECTOR MCC-008B, CKT P42-6, (REF OE-4)
24				
25	42-6-2 (6)			
26	(O6413) 41-2-1A	70	STOP	BLOWER #2 MCC-038, P41-2, (REF OE-4)
27				
28	41-2-2 (8)			
29	(O6414) 43-2-1A	76	STOP	FLOCCULATOR MIXER #2 SC-051B, P43-2, (REF OE-5)
30				
31	43-2-2 (10)			
32	(O6415) 43-10-1A	83	STOP	P-CHEM CLARIFIER #2 MCC-052B, P43-10, (REF OE-5)
33				
34	43-10-2 (12)			
35				
36	(O6416) 43-8-1A	89	STOP	P-CHEM SLUDGE PUMP #2 SC-053B, P43-8, (REF OE-5)
37	43-8-2 (14)			
38				
39	O6417	97	SPARE	
40	R6417	98		

BLOWER BUILDING PLC PANEL

NOTE: 1. ☒-DESIGNATES PLC PANEL TERMINAL
2. PLC TERMINATIONS THIS SHEET ARE ON TERMINAL BLOCK TB1

NO	DATE	DESCRIPTION	BY	CKD

REVISIONS

LD&A
Larmar Dunn & Associates Inc.
1305 Maloney Road
Knoxville, TN 37920

CITY OF OAK RIDGE
ANDERSON COUNTY, TENNESSEE

PLC DIGITAL INPUTS & OUTPUTS
ELEMENTARY DIAGRAM

DESIGNED BY	CHECKED BY	SCALE:	SHEET
GSH		NONE	M-36
DRAWN BY	DATE	FILE NO.	OF NO. SHEETS
EGB	11/17/98	OR-9408-D	

LAST DATE MODIFIED 12/20/98

IM36.DWG 1:1

PLC-5/40E SYSTEM
CHASSIS #B1 SLOT 15
RACK 6 GROUP 5
1771-OW16
120VAC CONTACT OUTPUT MODULE

Term	Wire	Terminal	Function	Device
1	41-9-3 (R6500)	1	START	AREATION INLUENT SAMPLE PUMP MCC-060, P41-9, (REF OE-4)
2	(O6500) 41-9-2	2	START	
3	43-3-3 (R6501)	6	START	FLOCCULATOR MIXER #3 SC-051C, P43-3, (REF OE-5)
4	(O6501) 43-3-2	7	START	
5	41-11-3 (R6502)	13	START	NEW HP SPRAY PUMP #1 MCC-065A, P41-11, (REF OE-4)
6	(O6502) 41-11-2	14	START	
7	42-1-3 (R6503)	18	START	BLOWER #3 MCC-039, P42-1, (REF OE-4)
8	(O6503) 42-1-2	19	START	
9	43-4-3 (RG6504)	24	START	FLOCCULATOR MIXER #4 SC-051D, P43-4, (REF OE-5)
10	(O6504) 43-4-2	25	START	
11	43-11-3 (R6505)	31	RUN	P-CHEM RECIRCULATION PUMP MCC-054, P43-11, (REF OE-5)
12	(O6505) 43-11-2	32	RUN	
13	R6506	37	SPARE	
14	O6506	38	SPARE	
15	R6507	39	SPARE	
16	O6507	40	SPARE	
17	(O6510) 41-9-1A	3	STOP	AREATION INLUENT SAMPLE PUMP MCC-060, P41-9, (REF OE-4)
18				
19	41-9-2 (2)			
20	(O6511) 43-3-1A	8	STOP	FLOCCULATOR MIXER #3 SC-051C, P43-3, (REF OE-5)
21				
22	43-3-2 (4)			
23	(O6512) 41-11-1A	15	STOP	NEW HP SPRAY PUMP #1 MCC-065A, P41-11, (REF OE-4)
24				
25	41-11-2 (6)			
26	(O6513) 42-1-1A	20	STOP	BLOWER #3 MCC-039, P42-1, (REF OE-4)
27				
28	42-1-2 (8)			
29	(O6514) 43-4-1A	26	STOP	FLOCCULATOR MIXER #4 SC-051D, P43-4, (REF OE-5)
30				
31	43-4-2 (10)			
32	O6515	45	SPARE	
33				
34	R6515	46	SPARE	
35				
36	O6516	47	SPARE	
37	R6517	48	SPARE	
38				
39	O6517	49	SPARE	
40	R6517	50	SPARE	

PLC-5/40E SYSTEM
CHASSIS #B1 SLOT 16
RACK 6 GROUP 6
1771-OW16
120VAC CONTACT OUTPUT MODULE

Term	Wire	Terminal	Function	Device
1	R6600	55	SPARE	
2	O6600	56	SPARE	
3	43-5-3 (R6601)	59	START	FLOCCULATOR MIXER #5 SC-051E, P43-5, (REF OE-5)
4	(O6601) 43-5-2	60	START	
5	42-14-3 (R6602)	66	START	NEW HP SPRAY PUMP #2 MCC-065B, P42-14, (REF OE-4)
6	(O6602) 42-14-2	67	START	
7	R6603	78	SPARE	
8	O6603	79	SPARE	
9	43-6-3 (R6604)	71	START	FLOCCULATOR MIXER #6 SC-051F, P43-6, (REF OE-5)
10	(O6604) 43-6-2	72	START	
11	R6605	80	SPARE	
12	O6605	81	SPARE	
13	R6606	86	SPARE	
14	O6606	87	SPARE	
15	R6607	88	SPARE	
16	O6607	89	SPARE	
17	O6610	90	SPARE	
18				
19	R6610	91	SPARE	
20	(O6611) 43-5-1A	61	STOP	FLOCCULATOR MIXER #5 SC-051E, P43-5, (REF OE-5)
21				
22	43-5-2 (4)			
23	(O6612) 42-14-1A	68	STOP	NEW HP SPRAY PUMP #2 MCC-065B, P42-14, (REF OE-4)
24				
25	42-14-2 (6)			
26	O6613	98	SPARE	
27				
28	R6613	99	SPARE	
29	(O6614) 43-6-1A	73	STOP	FLOCCULATOR MIXER #6 SC-051F, P43-6, (REF OE-5)
30				
31	43-6-2 (10)			
32	O6615	100	SPARE	
33				
34	R6615	101	SPARE	
35				
36	O6616	102	SPARE	
37	R6616	103	SPARE	
38				
39	O6617	104	SPARE	
40	R6617	105	SPARE	

AS BUILT

BLOWER BUILDING PLC PANEL

NOTE: 1. ☒-DESIGNATES PLC PANEL TERMINAL
2. PLC TERMINATIONS THIS SHEET ARE ON TERMINAL BLOCK TB2

NO.	DATE	DESCRIPTION	BY	CKD
		REVISIONS		

LD&A
Lamar Dunn & Associates Inc.
3305 Maloney Road
Knoxville, TN 37930

CITY OF OAK RIDGE
ANDERSON COUNTY, TENNESSEE

PLC DIGITAL INPUTS & OUTPUTS
ELEMENTARY DIAGRAM

DESIGNED BY	CHECKED BY	SCALE:	SHEET IM-37
GSH		NONE	OF NO. SHEETS
DRAWN BY	DATE	FILE NO.	
EGB	11/17/98	OR-9408-D	

LAST DATE MODIFIED 11/20/98

IM37.DWG 1:1

Lord & Company, Inc.
Instrumentation & Control Systems

377 Carowinds Boulevard, Suite 203; Fort Mill, SC 29708
Tel: (803) 802- 0060 Fax: (803) 802- 0070

Other Offices
Baltimore, Maryland
Hampton, Virginia
Manassas, Virginia

INFLUENT SCREEN BUILDING

PLC CONTROL PANEL

CHASSIS : C1

Waste Water Treatment Plant Improvements
Liquid Phase Treatment Project

Oak Ridge, TN

AS - BUILT WIRING DIAGRAMS

Engineer.....:	*Lamar Dunn & Associates*
Contractor.....:	*Southern Constructors*
Supplier.....:	*Lord & Company, Inc.*
L&C Project #:	*SE-1728*
Date.....:	*10/24/00*

Corporate Office: 8811 Sudley Road, Manassas, VA 20110

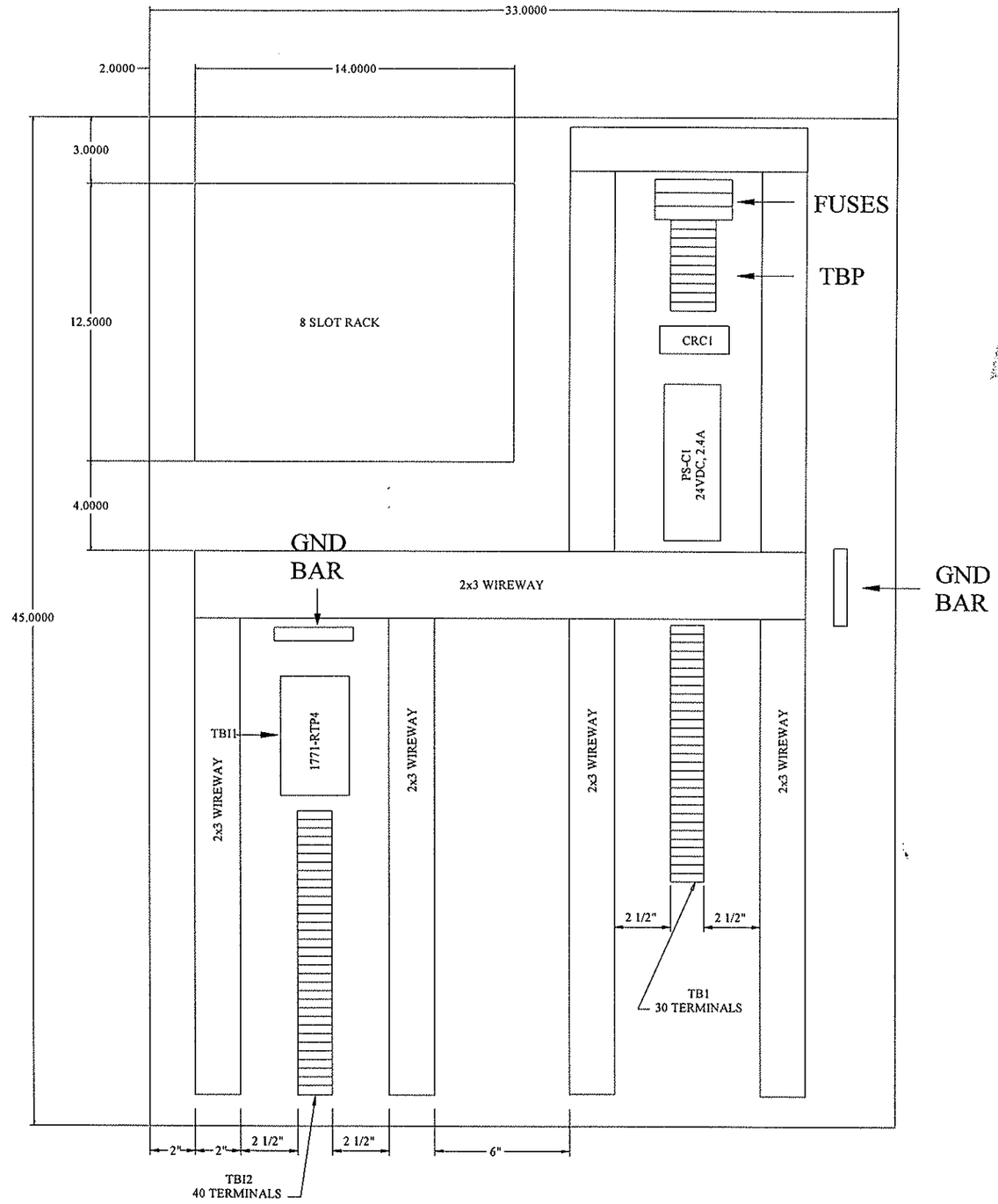

AS BUILT

NO.	DATE	DESCRIPTION	BY	CKD
1	02/11/00	L & C SUBMITTAL CHANGES, ADDED PS-C1 AND RELAY	FDM	

REVISIONS

LD&A
Lamar Dunn & Associates Inc.
1305 Maloney Road
Knoxville, TN 37920

CITY OF OAK RIDGE
ANDERSON COUNTY, TENNESSEE

INFLUENT SCREEN BUILDING
PLC PANEL LAYOUT

DESIGNED BY	CHECKED BY	SCALE:
GSH	JMH	NONE
DRAWN BY	DATE	FILE NO.
EGB	04-98	OR-9408-D

SHEET IP-3 OF NO. SHEETS

LAST DATE MODIFIED 10/21/99

PAN3.DWG

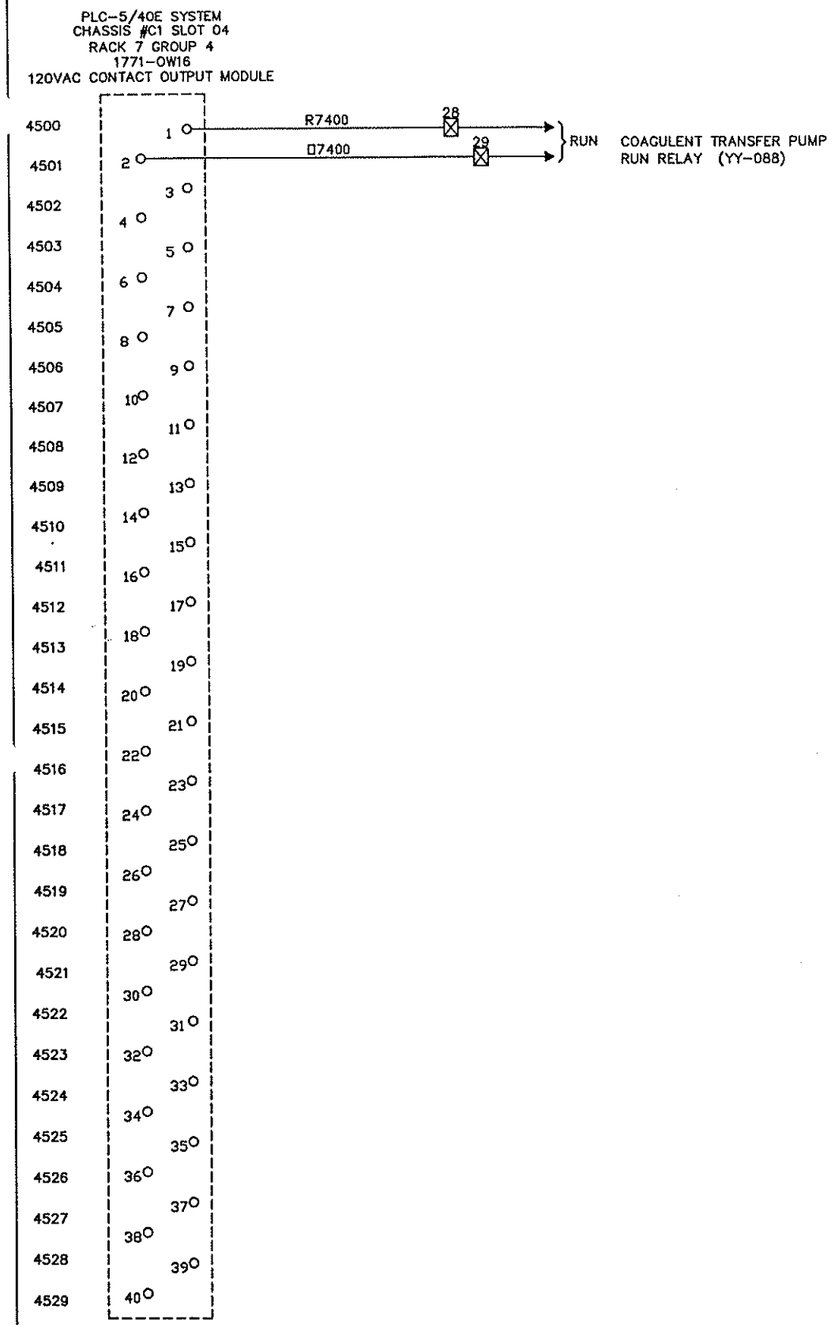

AS BUILT

INLET SCREENING BUILDING PLC PANEL

NOTE: 1. ☒ -DESIGNATES PLC PANEL TERMINAL
2. PLC TERMINATIONS THIS SHEET ARE ON TERMINAL BLOCK TB1

NO.	DATE	DESCRIPTION	BY	CHK.

REVISIONS

LD&A
Lerner Dunn & Associates Inc.
3305 Mahaney Road
Knoxville, TN 37920

CITY OF OAK RIDGE
ANDERSON COUNTY, TENNESSEE

PLC DIGITAL INPUTS & OUTPUTS
ELEMENTARY DIAGRAM

DESIGNED BY	CHECKED BY	SCALE:	SHEET IM-45
JMH	GSH	NONE	OF NO. SHEETS
DRAWN BY	DATE	FILE NO.	
JMH	10/08/99	COR809SE06ST12	

LAST DATE MODIFIED 10/08/99

IM45.DWG 1:1

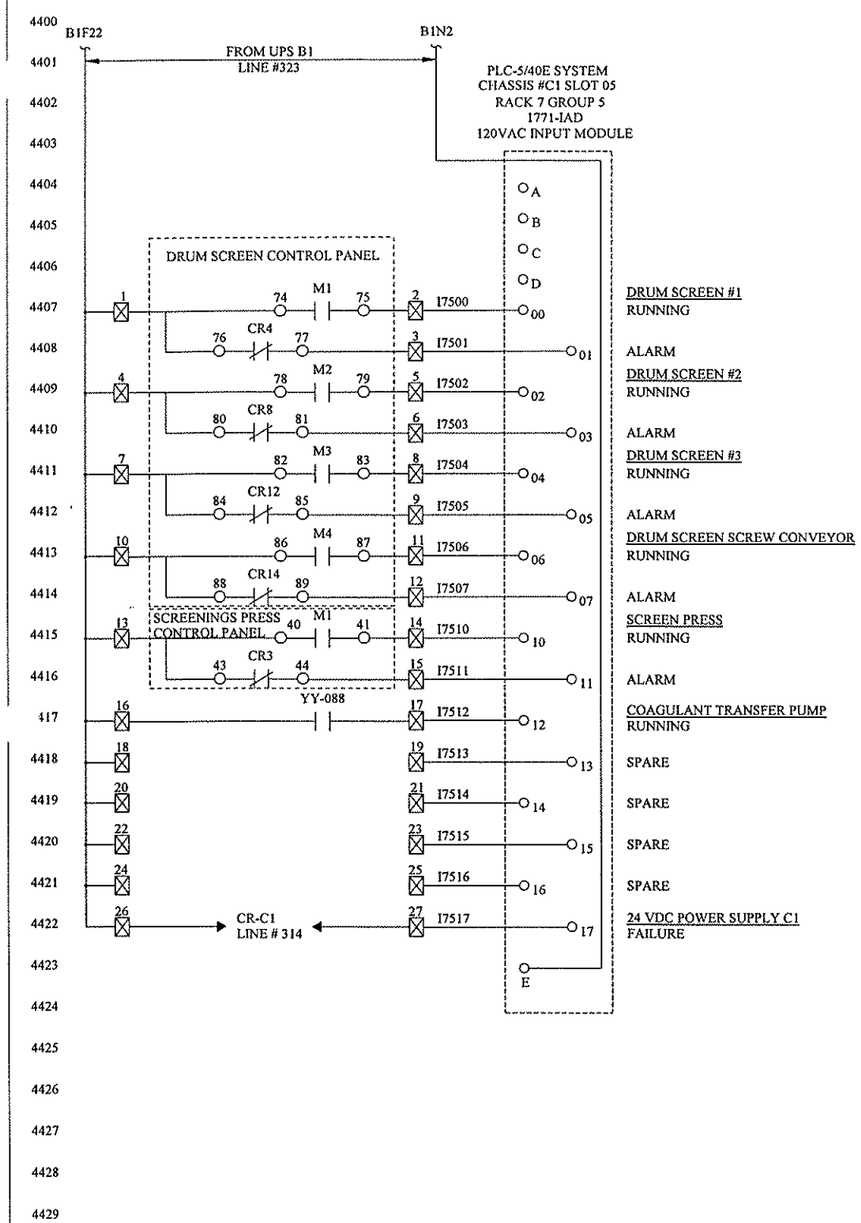

AS BUILT

INLET SCREENING BUILDING PLC PANEL

NOTE: 1. ☒-DESIGNATES PLC PANEL TERMINAL
2. PLC TERMINATIONS THIS SHEET ARE ON TERMINAL BLOCK TB1

NO.	DATE	DESCRIPTION	BY	CKD.

REVISIONS

LD&A
Lamar Dunn & Associates Inc.
1305 Maloney Road
Knoxville, TN 37920

CITY OF OAK RIDGE
ANDERSON COUNTY, TENNESSEE

PLC DIGITAL INPUTS & OUTPUTS
ELEMENTARY DIAGRAM

DESIGNED BY	CHECKED BY	SCALE:
GSH		NONE
DRAWN BY	DATE	FILE NO.
EGB	11/18/98	OR-9408-D

SHEET IM-44 OF NO. SHEETS

LAST DATE MODIFIED 11/18/98

IM44.DWG 1:1

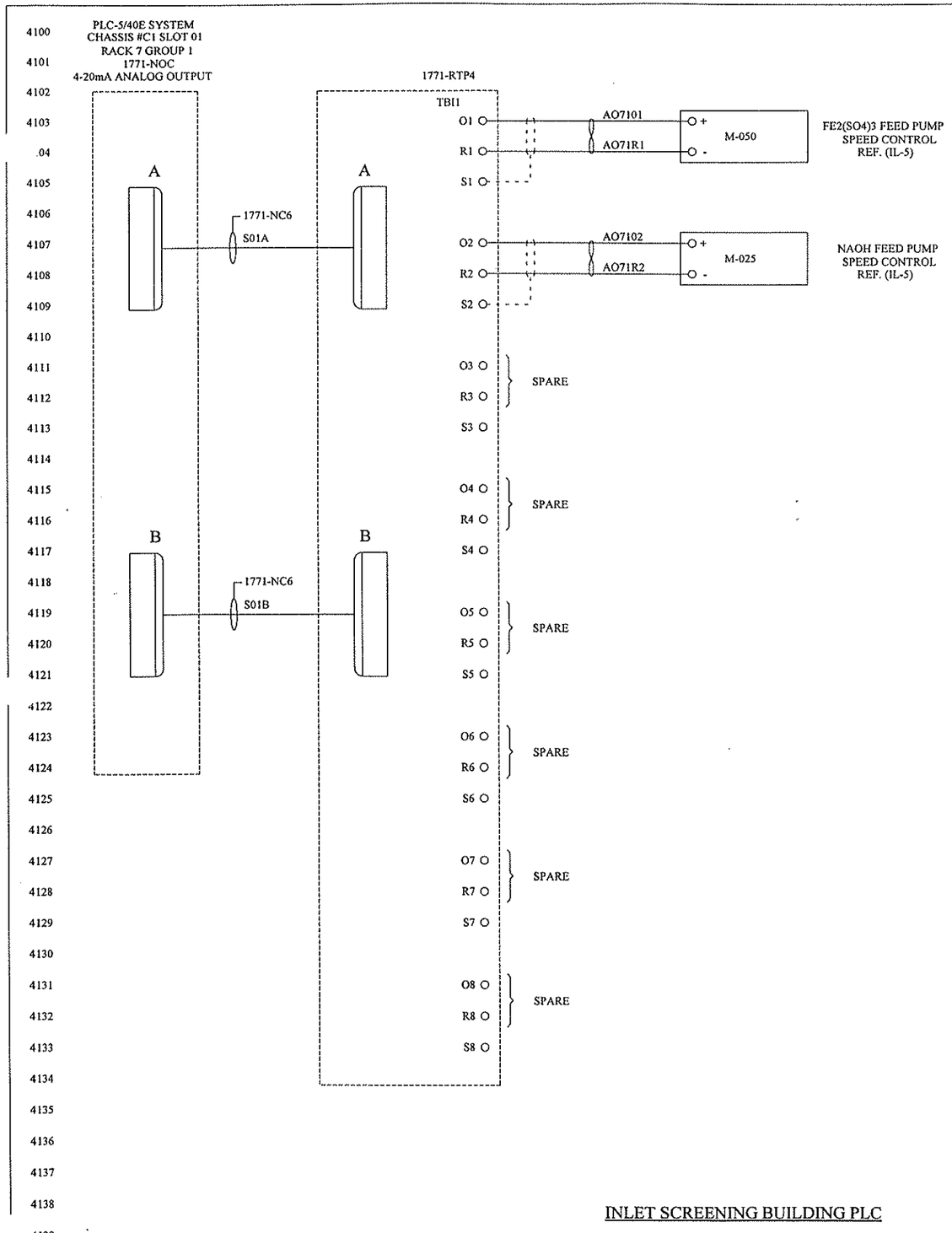

AS BUILT

NO.	DATE	DESCRIPTION	BY	CKD
		REVISIONS		

LD&A
Lamar Dunn & Associates Inc.
3305 Maloney Road
Knoxville, TN 37920

CITY OF OAK RIDGE
ANDERSON COUNTY, TENNESSEE

PLC ANALOG OUTPUTS
ELEMENTARY DIAGRAM

DESIGNED BY	CHECKED BY	SCALE:
GSH		NONE
DRAWN BY	DATE	FILE NO.
EGB	11/17/98	OR-9408-D

SHEET IM-41 OF NO. SHEETS

LAST DATE MODIFIED 12/20/98

IM41.DWG 1:1

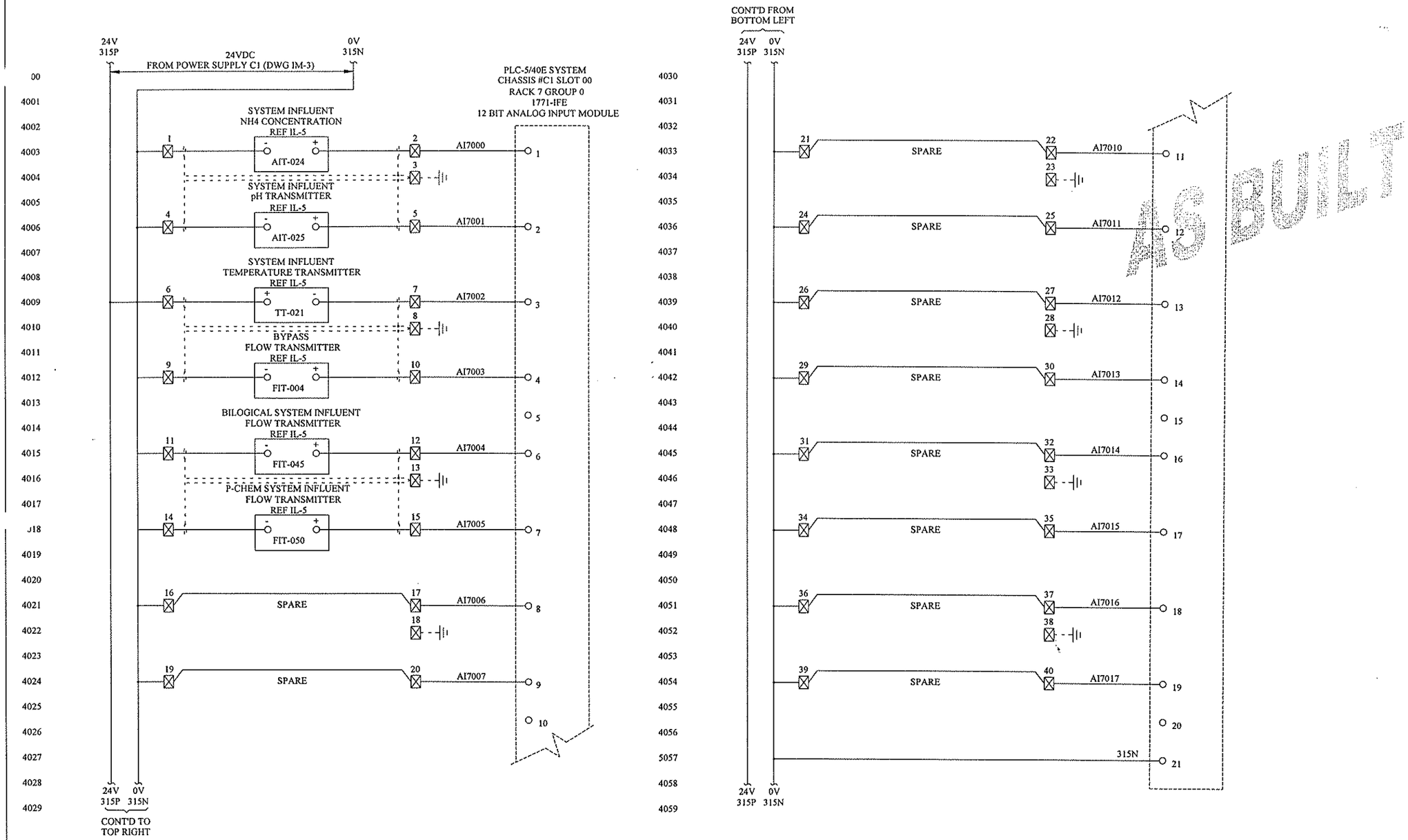

INLET SCREENING BUILDING PLC

NOTE: 1. ⊠-DESIGNATES PLC PANEL TERMINAL
2. PLC TERMINATIONS THIS SHEET ARE ON TERMINAL BLOCK TB12

NO.	DATE	DESCRIPTION	BY	CKD.
		REVISIONS		

LD&A
Lamar Dunn & Associates Inc.
3305 Maloney Road
Knoxville, TN 37920

CITY OF OAK RIDGE
ANDERSON COUNTY, TENNESSEE

PLC ANALOG INPUTS
ELEMENTARY DIAGRAM

DESIGNED BY	CHECKED BY	SCALE:	SHEET IM-40
GSH		NONE	
DRAWN BY	DATE	FILE NO.	OF NO. SHEETS
EGB	11/17/98	OR-9408-D	

LAST DATE MODIFIED 12/20/98

IM40.DWG 1:1

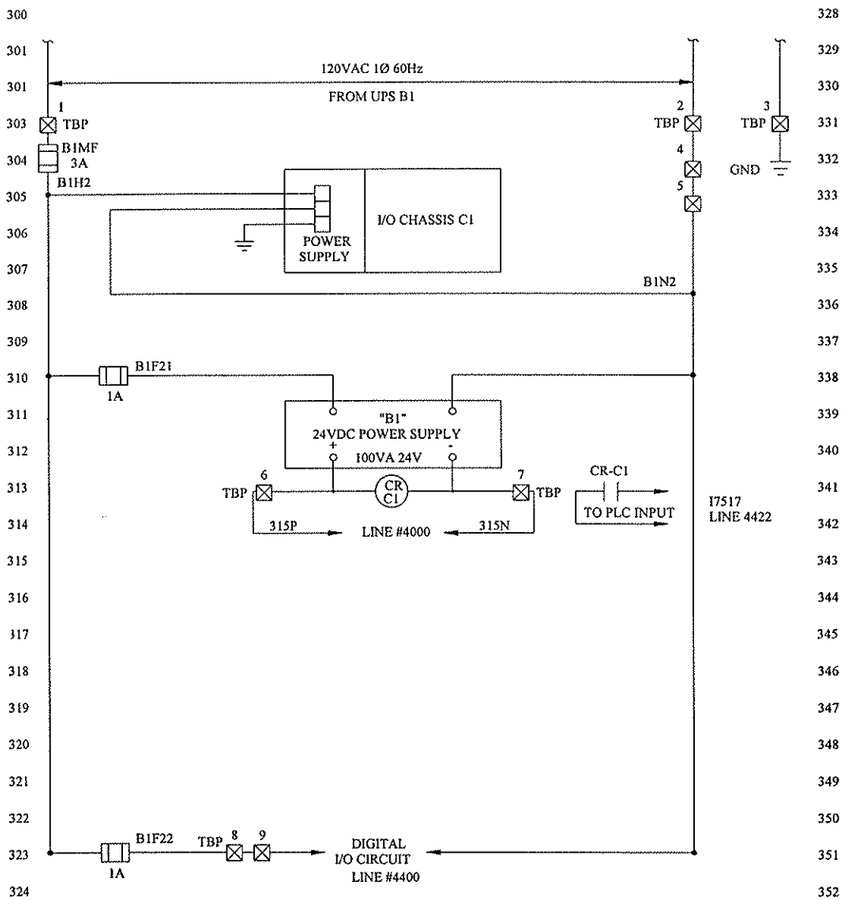

AS BUILT

NO.	DATE	DESCRIPTION	BY	CKD

REVISIONS

LD&A
Lamar Dunn & Associates Inc.
3305 Kingston Road
Knoxville, TN 37920

CITY OF OAK RIDGE
ANDERSON COUNTY, TENNESSEE

INLET SCREENING BUILDING
PLC CONTROL POWER

DESIGNED BY	CHECKED BY	SCALE:	SHEET IM-3
GSH		NONE	OF NO. SHEETS
DRAWN BY	DATE	FILE NO.	
EGB	04-98	OR-9408-D	

LAST DATE MODIFIED 10/27/98 PLC3.DWG 1:1

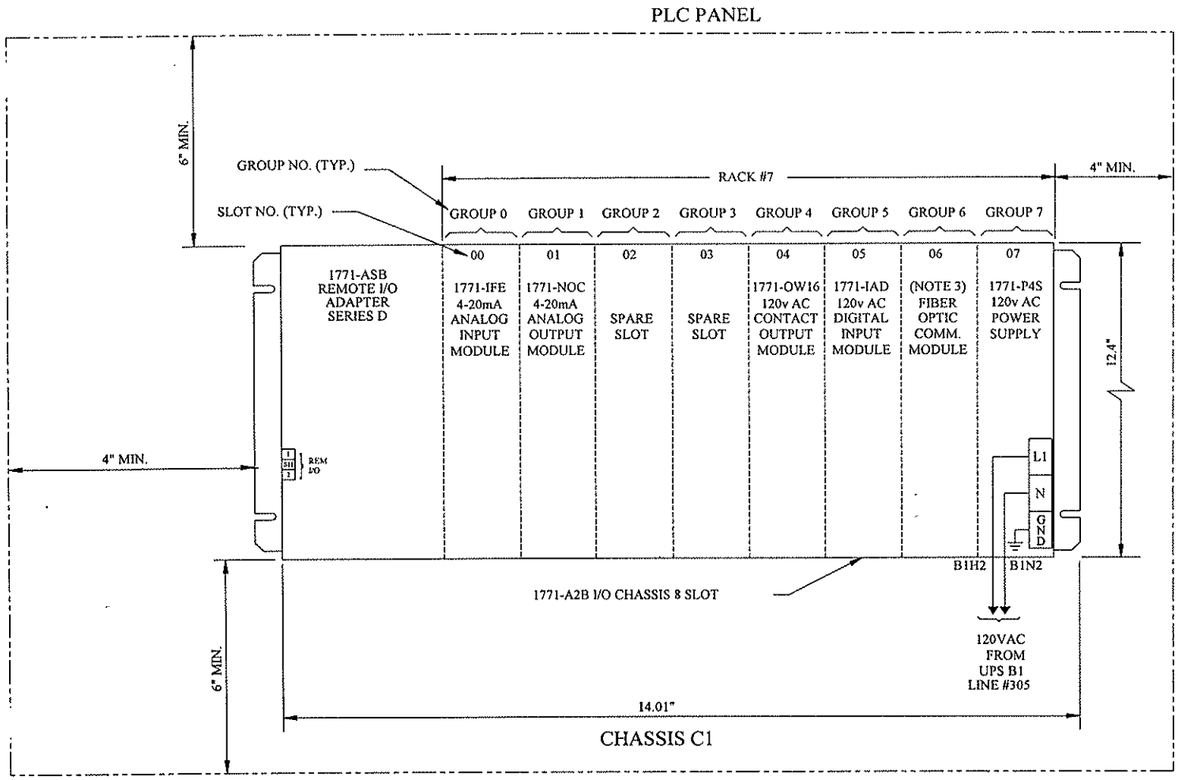

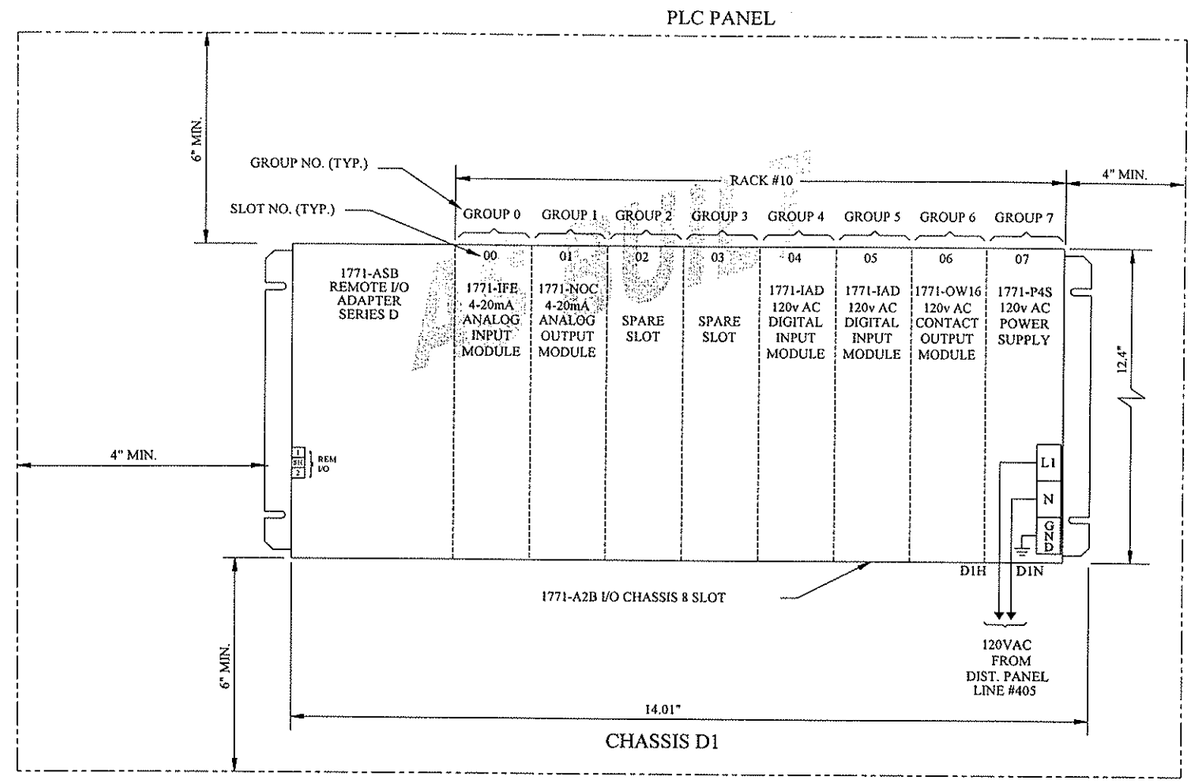

1771-A2B POWER SUPPLY CONFIGURATION PLUG: LEFT POSITION

1771-A2B BACKPLANE DIP SWITCH SETTINGS:
1-OFF
2-ON
3-OFF
4-OFF
5-ON
6-OFF
7-OFF
8-OFF

1771-ASB DIP SWITCH: DIP SWITCH #1 SETTINGS:
1-ON
2-ON
3-ON
4-OFF
5-OFF
6-OFF
7-ON
8-ON

1771-ASB DIP SWITCH: DIP SWITCH #2 SETTINGS:
1-ON
2-OFF
3-OFF
4-OFF
5-OFF
6-OFF

1771-ASB PLUG CONNECTION SWITCH SETTINGS:
1-LEFT
2-LEFT
3-LEFT

1771-A2B POWER SUPPLY CONFIGURATION PLUG: LEFT POSITION

1771-A2B BACKPLANE DIP SWITCH SETTINGS:
1-OFF
2-ON
3-OFF
4-OFF
5-ON
6-OFF
7-OFF
8-OFF

1771-ASB DIP SWITCH: DIP SWITCH #1 SETTINGS:
1-ON
2-ON
3-OFF
4-ON
5-ON
6-ON
7-ON
8-ON

1771-ASB DIP SWITCH: DIP SWITCH #2 SETTINGS:
1-ON
2-OFF
3-OFF
4-OFF
5-OFF
6-OFF

1771-ASB PLUG CONNECTION SWITCH SETTINGS:
1-LEFT
2-LEFT
3-LEFT

NOTE:
1. "EACH I/O MODULE IS SLOTTED IN TWO PLACES AT THE REAR EDGE. THESE SLOTS ARE INTENDED TO MATE WITH THE PLASTIC KEYS SUPPLIED WITH THE CHASSIS. POSITION THE KEYS IN THE BACKPLANE CONNECTOR TO CORRESPOND WITH THE SLOTS IN A PARTICULAR MODULE, TO GUARD AGAINST THE INSERTION OF THE WRONG MODULE." (REF. ALLEN-BRADLEY PUBLICATION 1771-2.49)
2. INPUT VOLTAGE RANGE FOR 1771-P4 POWER SUPPLY IS 97-132 VAC.
3. FIBER OPTIC COMMUNICATION MODULE PHOENIX DIGITAL OCM-DPR-85-D-ST.

NO.	DATE	DESCRIPTION	BY	CKD.
		REVISIONS		

LD&A
Lamar Dunn & Associates Inc.
3305 Sidney Road
Knoxville, TN 37920

CITY OF OAK RIDGE
ANDERSON COUNTY, TENNESSEE

PLC BLOCK DIAGRAM

DESIGNED BY	CHECKED BY	SCALE:	SHEET IM-9
GSH		NONE	
DRAWN BY	DATE	FILE NO.	OF NO. SHEETS
EGB	09/22/98	OR-9408-D	

LAST DATE MODIFIED 12/20/98

IM9. DWG 1:1

Lord & Company, Inc.
Instrumentation & Control Systems

377 Carowinds Boulevard, Suite 203; Fort Mill, SC 29708
Tel: (803) 802- 0060 Fax: (803) 802- 0070

Other Offices
Baltimore, Maryland
Hampton, Virginia
Manassas, Virginia

TURTLE PARK PUMP STATION

PLC CONTROL PANEL

CHASSIS : D1

Waste Water Treatment Plant Improvements
Liquid Phase Treatment Project

Oak Ridge, TN

AS - BUILT WIRING DIAGRAMS

Engineer.....:	*Lamar Dunn & Associates*
Contractor.....:	*Southern Constructors*
Supplier.....:	*Lord & Company, Inc.*
L&C Project #:	*SE-1728*
Date.....:	*10/24/00*

Corporate Office: 8811 Sudley Road, Manassas, VA 20110

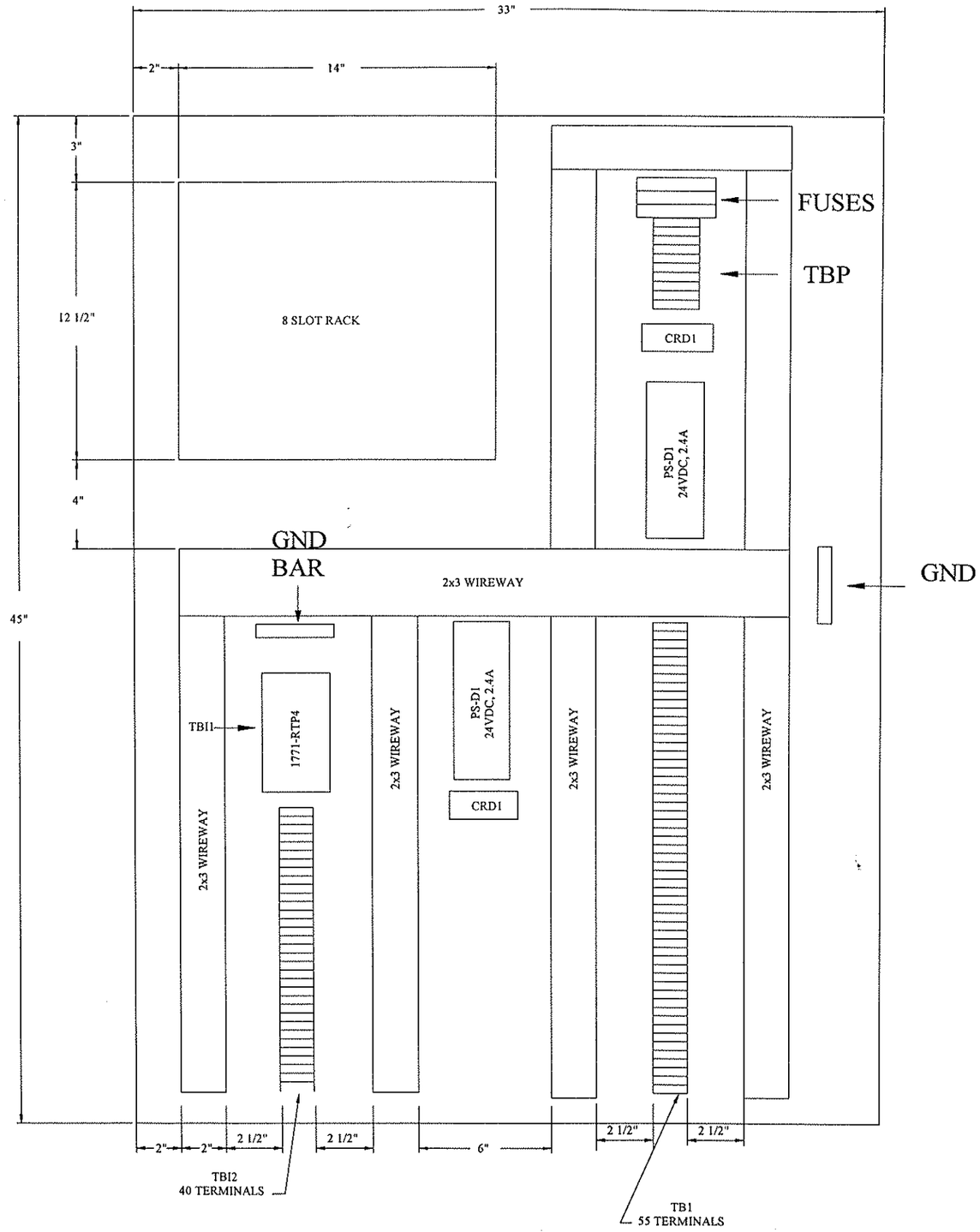

AS BUILT

1 02/11/00 L & C SUBMITTAL CHANGES, ADDED PS-D1 AND RELAY FDM

JMH

LAST DATE MODIFIED 10/21/98

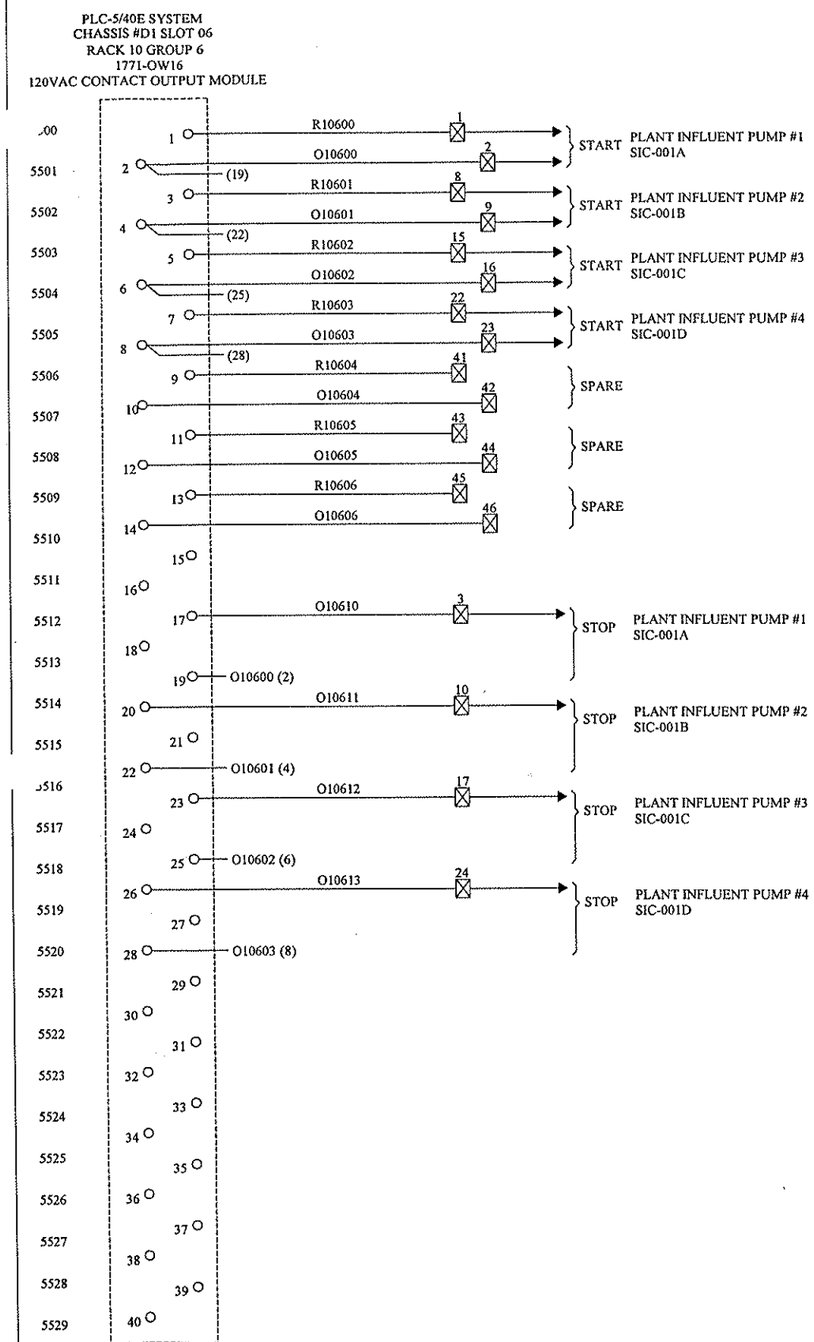

AS BUILT

TURTLE PARK PLC PANEL

NOTE: 1. ☒ -DESIGNATES PLC PANEL TERMINAL
2. PLC TERMINATIONS THIS SHEET ARE ON TERMINAL BLOCK TB1

NO.	DATE	DESCRIPTION	BY	CKD
		REVISIONS		

LD&A
Lamar Dunn & Associates Inc.
3305 Maloney Road
Knoxville, TN 37920

CITY OF OAK RIDGE
ANDERSON COUNTY, TENNESSEE

PLC DIGITAL INPUTS & OUTPUTS
ELEMENTARY DIAGRAM

DESIGNED BY	CHECKED BY	SCALE:
GSH		NONE
DRAWN BY	DATE	FILE NO.
EGB	11/18/98	OR-9408-D

SHEET M-55 OF NO. SHEETS

LAST DATE MODIFIED 12/20/94

IM55.DWG 1:1

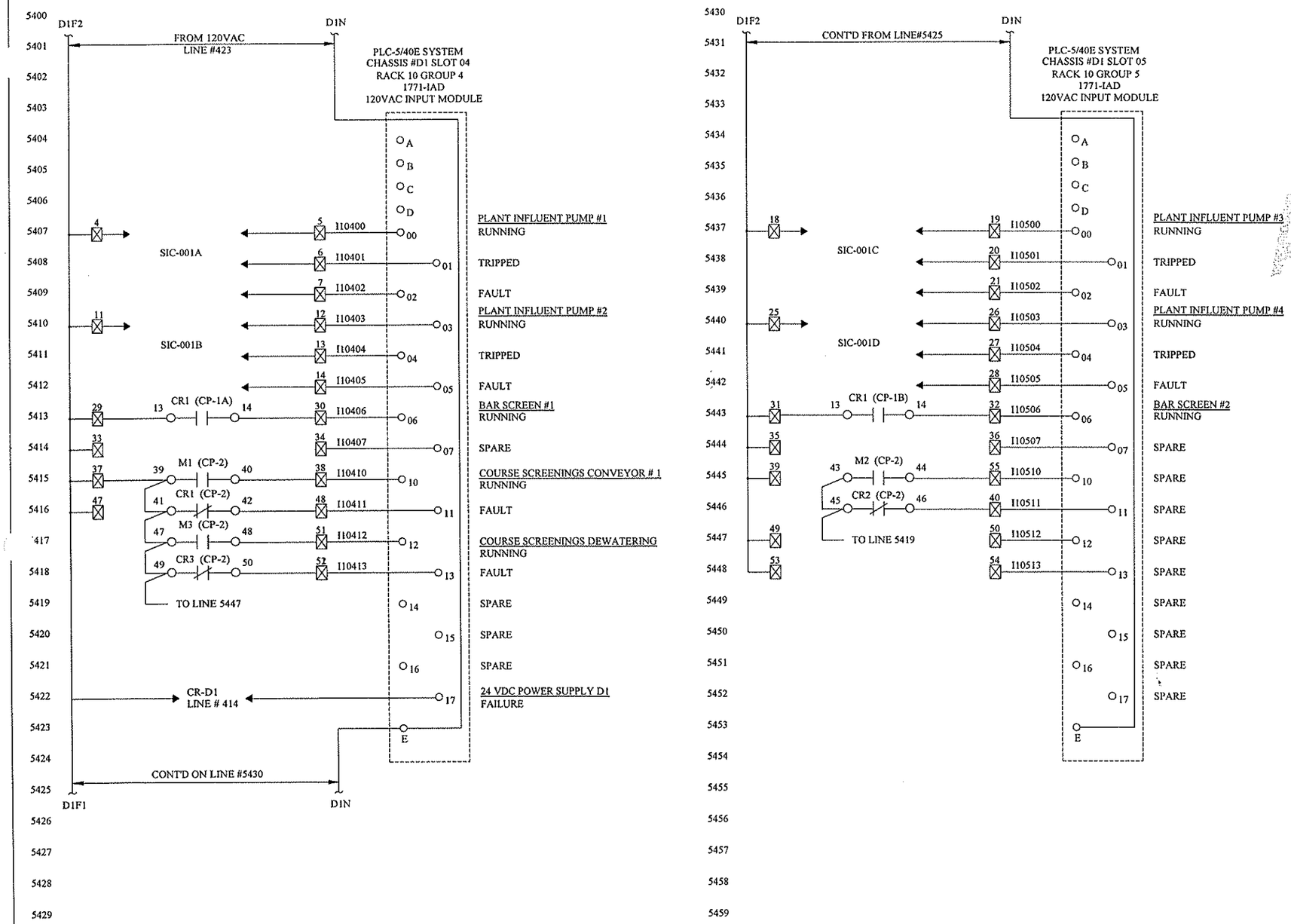

AS BUILT

TURTLE PARK PLC PANEL

NOTE:
1. ☒ -DESIGNATES PLC PANEL TERMINAL
2. PLC TERMINATIONS THIS SHEET ARE ON TERMINAL BLOCK TB1
3 CP-2 DENOTES THE HELICON / HEXICON CONTROL PANEL
4 CP-1A AND CP-1B DENOTES THE DRUM SCREEN CONTROL PANELS

NO.	DATE	DESCRIPTION	BY	CKD.
		REVISIONS		

LD&A
Lamar Dunn & Associates Inc.
3300 Salaway Road
Knoxville, TN 37920

CITY OF OAK RIDGE
ANDERSON COUNTY, TENNESSEE

PLC DIGITAL INPUTS & OUTPUTS
ELEMENTARY DIAGRAM

DESIGNED BY	CHECKED BY	SCALE:	SHEET IM-54
GSH		NONE	OF NO. SHEETS
DRAWN BY	DATE	FILE NO.	
EGB	11/18/98	OR-9408-D	

LAST DATE MODIFIED 12/20/94

IM54.DWG 1:1

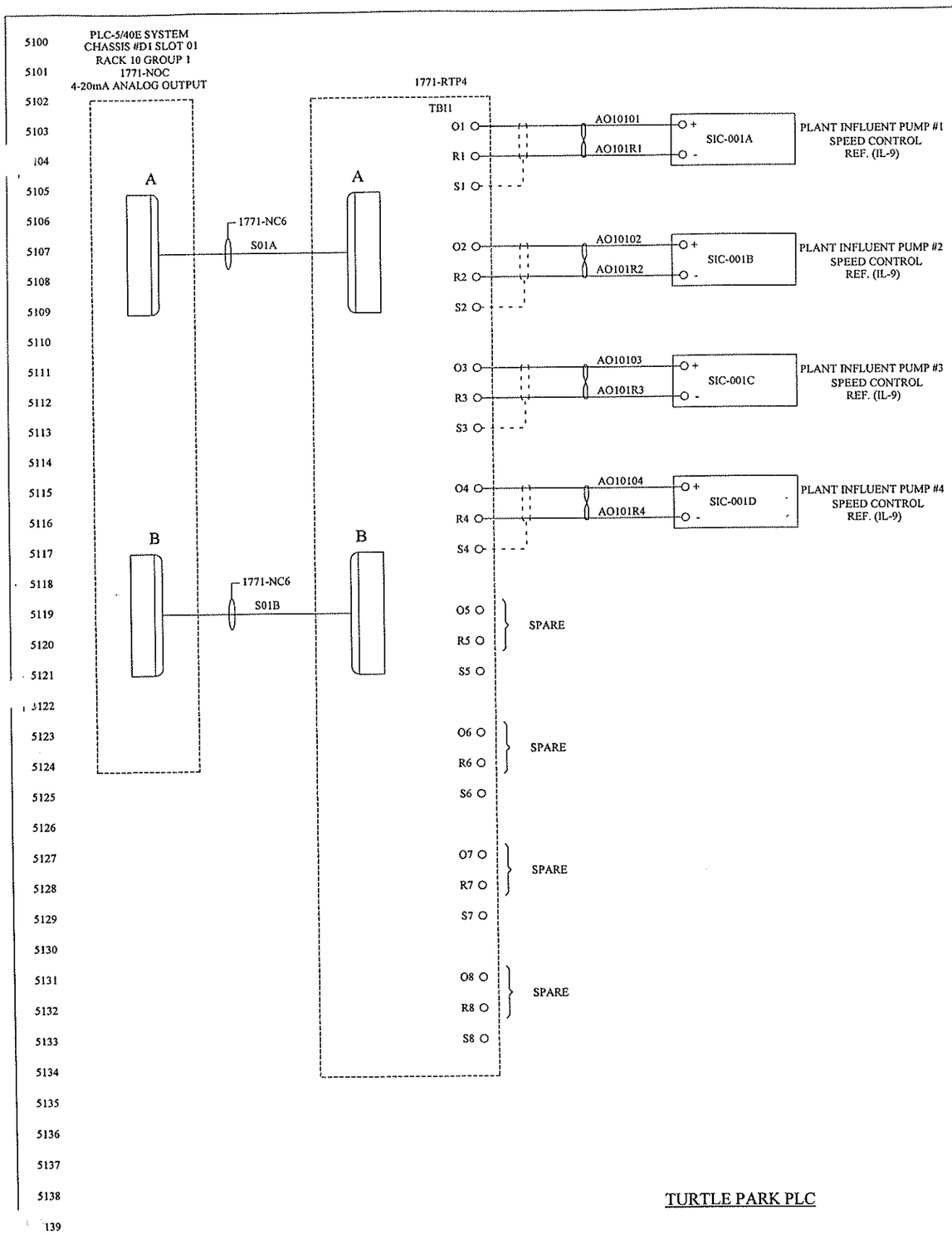

AS BUILT

TURTLE PARK PLC

NO.	DATE	DESCRIPTION	BY	CKD.
		REVISIONS		

LD&A
Lamar Dunn & Associates Inc.
3305 Mahaney Road
Knoxville, TN 37920

CITY OF OAK RIDGE
ANDERSON COUNTY, TENNESSEE

PLC ANALOG OUTPUTS
ELEMENTARY DIAGRAM

DESIGNED BY	CHECKED BY	SCALE:
GSH		NONE
DRAWN BY	DATE	FILE NO.
EGB	11/17/98	OR-9408-D

SHEET IM-51 OF NO. SHEETS

LAST DATE MODIFIED 12/20/99

IM51.DWG 1:1

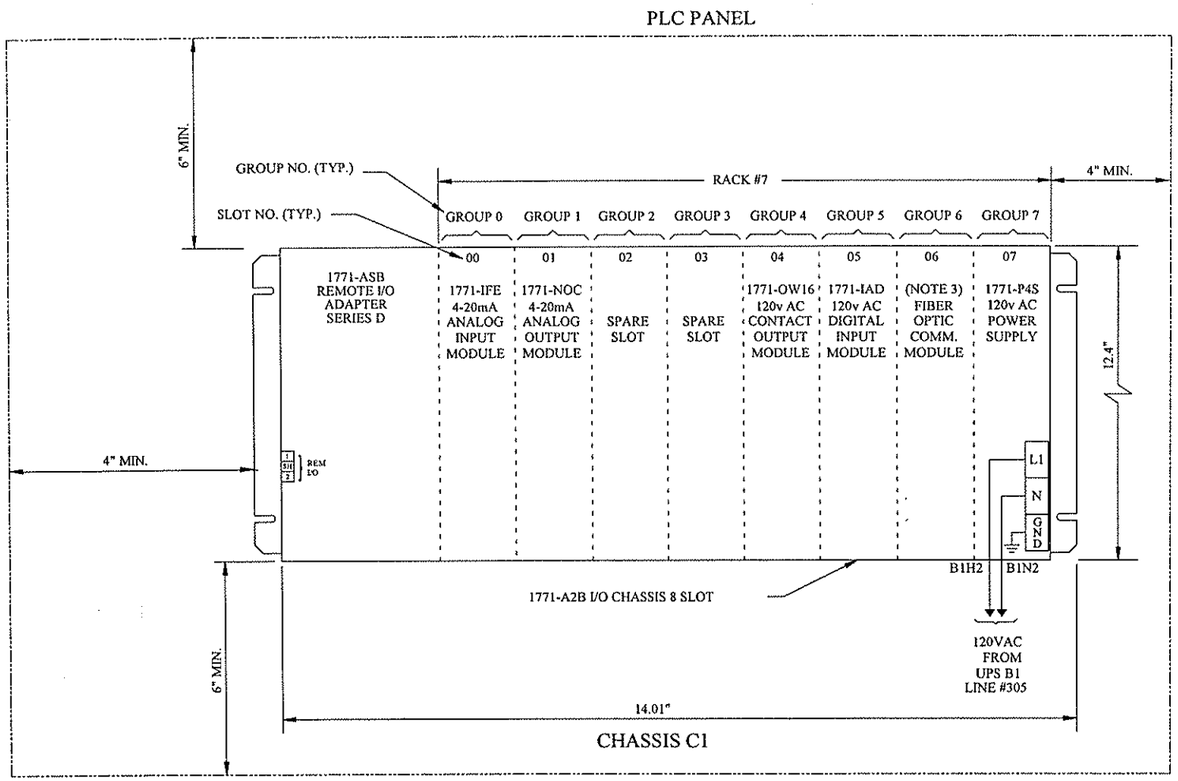

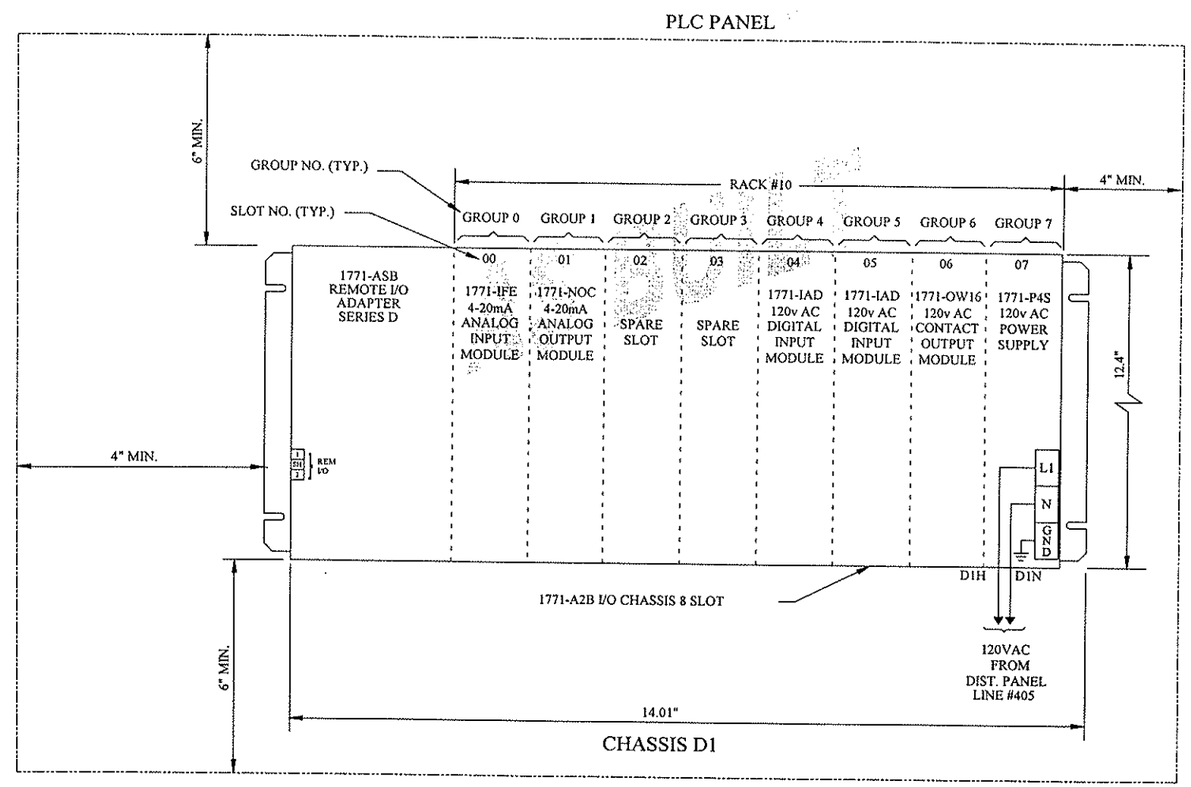

1771-A2B POWER SUPPLY CONFIGURATION PLUG: LEFT POSITION

1771-A2B BACKPLANE DIP SWITCH SETTINGS:
1-OFF
2-ON
3-OFF
4-OFF
5-ON
6-OFF
7-OFF
8-OFF

1771-ASB DIP SWITCH: DIP SWITCH #1 SETTINGS:
1-ON
2-ON
3-ON
4-OFF
5-OFF
6-OFF
7-ON
8-ON

1771-ASB DIP SWITCH: DIP SWITCH #2 SETTINGS:
1-ON
2-OFF
3-OFF
4-OFF
5-OFF
6-OFF

1771-ASB PLUG CONNECTION SWITCH SETTINGS:
1-LEFT
2-LEFT
3-LEFT

1771-A2B POWER SUPPLY CONFIGURATION PLUG: LEFT POSITION

1771-A2B BACKPLANE DIP SWITCH SETTINGS:
1-OFF
2-ON
3-OFF
4-OFF
5-ON
6-OFF
7-OFF
8-OFF

1771-ASB DIP SWITCH: DIP SWITCH #1 SETTINGS:
1-ON
2-ON
3-OFF
4-ON
5-ON
6-ON
7-ON
8-ON

1771-ASB DIP SWITCH: DIP SWITCH #2 SETTINGS:
1-ON
2-OFF
3-OFF
4-OFF
5-OFF
6-OFF

1771-ASB PLUG CONNECTION SWITCH SETTINGS:
1-LEFT
2-LEFT
3-LEFT

NOTE:
1. "EACH I/O MODULE IS SLOTTED IN TWO PLACES AT THE REAR EDGE. THESE SLOTS ARE INTENDED TO MATE WITH THE PLASTIC KEYS SUPPLIED WITH THE CHASSIS. POSITION THE KEYS IN THE BACKPLANE CONNECTOR TO CORRESPOND WITH THE SLOTS IN A PARTICULAR MODULE, TO GUARD AGAINST THE INSERTION OF THE WRONG MODULE." (REF. ALLEN-BRADLEY PUBLICATION 1771-2.49)
2. INPUT VOLTAGE RANGE FOR 1771-P4 POWER SUPPLY IS 97-132 VAC.
3. FIBER OPTIC COMMUNICATION MODULE PHOENIX DIGITAL OCM-DPR-85-D-ST.

NO	DATE	DESCRIPTION	BY	CKD

REVISIONS

LD&A
Lamar Dunn & Associates Inc.
3305 Mahoney Road
Knoxville, TN 37920

CITY OF OAK RIDGE
ANDERSON COUNTY, TENNESSEE

PLC BLOCK DIAGRAM

DESIGNED BY	CHECKED BY	SCALE:	SHEET IM-9
GSH		NONE	
DRAWN BY	DATE	FILE NO.	OF NO. SHEETS
EGB	09/22/98	OR-9408-D	

LAST DATE MODIFIED 12/20/98

IM9. DWG 1:1